SILVER PALMS COMMUNITY DEVELOPMENT DISTRICT

MIAMI-DADE COUNTY

REGULAR BOARD MEETING
SEPTEMBER 19, 2022
6:00 P.M.

Special District Services, Inc.
8785 SW 165th Avenue, Suite 200
Miami, FL 33193

www.silverpalmscdd.org
786.347.2711 Telephone
877.SDS.4922 Toll Free
561.630.4923 Facsimile

AGENDA
SILVER PALMS
COMMUNITY DEVELOPMENT DISTRICT
Meeting Room at Mercedes Benz of Cutler Bay
10701 SW 211th Street
Cutler Bay, Florida 33189
REGULAR BOARD MEETING
September 19, 2022
6:00 p.m.

A. Call to Order

B. Proof of Publication.....Page 1

C. Establish Quorum

D. Additions or Deletions to Agenda

E. Comments from the Public for Items Not on the Agenda

F. Approval of Minutes

1. June 20, 2022 Regular Board Meeting & PH.....Page 2

G. New Business

1. District Engineer Presentation of Lake Bank Easement Criteria for the Boards Consideration of Approval…….....Page 6
2. Discussion Regarding Adopting a District Rule Pertaining to Lake Bank Easement Criteria and to Consider Setting a Hearing Date.....Page 22
3. Discussion Regarding Encroachment at 10882 SW 229 St…….....Page 28
4. Discussion Regarding Encroachment at 10888 SW 229 St.....Page 30

H. Old Business

I. Administrative Matters

1. Financial Update…….Page 32
2. Accept and Receive the 20-Year Stormwater Needs Analysis as required by FS Section 403.9302…….Page 36

J. Additional Board Member/Staff Comments

1. District Counsel Update on the 2022 Florida Legislative Session.....Page 62

K. Adjourn

MIAMI DAILY BUSINESS REVIEW

Published Daily except Saturday, Sunday and
Legal Holidays
Miami, Miami-Dade County, Florida

STATE OF FLORIDA
COUNTY OF MIAMI-DADE:

Before the undersigned authority personally appeared GUILLERMO GARCIA, who on oath says that he or she is the DIRECTOR OF OPERATIONS, Legal Notices of the Miami Daily Business Review f/k/a Miami Review, a daily (except Saturday, Sunday and Legal Holidays) newspaper, published at Miami in Miami-Dade County, Florida; that the attached copy of advertisement, being a Legal Advertisement of Notice in the matter of

SILVER PALMS COMMUNITY DEVELOPMENT DISTRICT - FISCAL YEAR 2021/2022 REGULAR MEETING SCHEDULE

in the XXXX Court,
was published in said newspaper in the issues of

11/05/2021

Affiant further says that the said Miami Daily Business Review is a newspaper published at Miami, in said Miami-Dade County, Florida and that the said newspaper has heretofore been continuously published in said Miami-Dade County, Florida each day (except Saturday, Sunday and Legal Holidays) and has been entered as second class mail matter at the post office in Miami in said Miami-Dade County, Florida, for a period of one year next preceding the first publication of the attached copy of advertisement; and affiant further says that he or she has neither paid nor promised any person, firm or corporation any discount, rebate, commission or refund for the purpose of securing this advertisement for publication in the said newspaper.

Guillermo Garcia

Sworn to and subscribed before me this
5 day of NOVEMBER, A.D. 2021

(SEAL)
GUILLERMO GARCIA personally known to me

CHRISTINA LYNN RAVIX
Commission # GG 277771
Expires November 19, 2022
Bonded Thru Troy Fain Insurance 800-385-7019

SILVER PALMS COMMUNITY DEVELOPMENT DISTRICT FISCAL YEAR 2021/2022 REGULAR MEETING SCHEDULE

NOTICE IS HEREBY GIVEN that the Board of Supervisors of the Silver Palms Community Development District will hold Regular Meetings for the Fiscal Year 2021/2022 at 6:00 p.m. in a Meeting Room at Mercedes Benz of Cutler Bay located at 10701 SW 211th Street, Cutler Bay, Florida 33189, on the following dates:

November 15, 2021
January 17, 2022
April 18, 2022
June 20, 2022
September 19, 2022

The purpose of the meetings is to conduct any business coming before the Board. Meetings are open to the public and will be conducted in accordance with the provisions of Florida law. Copies of the Agendas for any of the meetings may be obtained from the District's website or by contacting the District Manager at 786-347-2711 Ext. 2011 and/or toll free at 1-877-737-4922 five (5) days prior to the date of the particular meeting.

From time to time one or two Supervisors may participate by telephone; therefore, at the location of these meetings there will be a speaker telephone present so that interested persons can attend the meetings at the above location and be fully informed of the discussions taking place either in person or by telephone communication. Meetings may be continued as found necessary to the time and place specified on the record.

If any person decides to appeal any decision made with respect to any matter considered at these meetings, such person will need a record of the proceedings and such person may need to insure that a verbatim record of the proceedings is made at his or her own expense and which record includes the testimony and evidence on which the appeal is based.

In accordance with the provisions of the Americans with Disabilities Act, any person requiring special accommodations or an interpreter to participate at any of these meetings should contact the District Manager at 786-347-2711 Ext. 2011 and/or toll free at 1-877-737-4922 at least seven (7) days prior to the date of the particular meeting.

Meetings may be cancelled from time to time without advertised notice.

SILVER PALMS COMMUNITY DEVELOPMENT DISTRICT

www.silverpalmscdd.org
11/5 21-37/0000560569M

SILVER PALMS COMMUNITY DEVELOPMENT DISTRICT
PUBLIC HEARING & REGULAR BOARD MEETING
JUNE 20, 2022

A. CALL TO ORDER

The June 20, 2022, Regular Board Meeting of the Silver Palms Community Development District (the "District") was called to order at 6:02 p.m. in a Meeting Room of Mercedes Benz of Cutler Bay located at 10701 SW 211th Street, Cutler Bay, Florida 33189.

B. PROOF OF PUBLICATION

Proof of publication was presented that Notice of the Regular Board Meeting had been published in the *Miami Daily Business Review* on November 5, 2021, as part of the District's Fiscal Year 2021/2022 Regular Meeting Schedule, as legally required.

C. ESTABLISH A QUORUM

It was determined that the attendance of the following Supervisors constituted a quorum and it was in order to proceed with the meeting: Chairperson Lisa Riley, Vice Chairman Miguel Zaiter and Supervisors Omar Reyes (via phone), Bryan Riley and Ashley Riley.

Staff in attendance included: District Manager Gloria Perez of Special District Services, Inc.; General Counsel Gregory George of Billing, Cochran, Lyles, Mauro & Ramsey, P.A.; and District Engineer Juan Alvarez of Alvarez Engineers, Inc.

D. ADDITIONS OR DELETIONS TO THE AGENDA

There were no additions or deletions to the agenda.

E. COMMENTS FROM THE PUBLIC FOR ITEMS NOT ON THE AGENDA

There were no comments from the public for items not on the agenda.

F. APPROVAL OF MINUTES

1. April 18, 2022, Regular Board Meeting

Mrs. Perez presented the April 18, 2022, Regular Board Meeting minutes and asked if there were any corrections or additions.

There being none, a **MOTION** was made by Supervisor Ashley Riley, seconded by Supervisor Bryan Riley and unanimously passed approving the minutes of the April 18, 2022, Regular Board Meeting, as presented.

Mrs. Perez then recessed the Regular Board Meeting at opening the Public Hearing.

G. PUBLIC HEARING

1. Proof of Publication

Proof of publication was presented that Notice of the Public Hearing had been published in the *Miami Daily Business Review* on May 31, 2022, and June 7, 2022, as legally required.

2. Receive Public Comment on Fiscal Year 2022/2023 Final Budget

Mrs. Perez then opened the public comment portion of the public hearing to receive comment on the Fiscal Year 2022/2023 Final Budget. There were no comments.

Mrs. Perez then closed the Public Hearing and reconvened the Regular Board Meeting.

3. Consider Resolution No. 2022-02 – Adopting a Fiscal Year 2022/2023 Final Budget

Mrs. Perez presented Resolution No. 2022-02, entitled:

RESOLUTION NO. 2022-02

A RESOLUTION OF THE SILVER PALMS COMMUNITY DEVELOPMENT DISTRICT ADOPTING A FISCAL YEAR 2022/2023 BUDGET.

Mrs. Perez read the title of the resolution into the record and stated that it provides for approving and adopting the fiscal year 2022/2023 Final Budget and the non-ad valorem special assessment.

A **MOTION** was made by Supervisor Zaiter, seconded by Supervisor Reyes and unanimously passed adopting Resolution No. 2022-02, approving the Fiscal Year 2022/2023 Final Budget, as presented and setting the fiscal year 2022/2023 Final Budget and non-ad valorem special assessment tax roll (Assessment Levy).

H. OLD BUSINESS

There were no Old Business items to come before the Board.

I. NEW BUSINESS

1. Discussion Regarding Lake Bank Encroachments

Mr. Alvarez explained that the lake bank was not owned by the District. He added that there was a 20' easement for the District to provide maintenance. He also noted that the rear of each property reaches the water line. The plat language is vague and notes structures, but does not specify trees.

A discussion ensued regarding the existing trees and the possible impact they pose, as the shade they cast on the grass could lead to erosion of the lake bank in the future.

A lengthy discussion ensued regarding the possible actions the Board could take to require the removal of the trees installed by the residents in order to provide a clearance of a minimum of 15 inches.

The Board directed the District engineer to create a criteria for Board consideration and to present it at the meeting scheduled for September 19, 2022, thereby specifying trees and palms that would be acceptable.

District Counsel briefly elaborated on a rulemaking process and was directed to prepare the same for the September meeting.

2. Consider Turf Management Median Plant Replacement Proposal

Mrs. Perez presented the Turf Management median plant replacement proposal dated 05/05/2022, in the amount of $4,715, plus watering in the amount of $175, per application.

A **MOTION** was made by Supervisor Ashley Riley, seconded by Supervisor Bryan Riley and passed unanimously approving the Turf Management median plant replacement proposal dated 05/05/2022, in the amount of $4,715, plus watering in the amount of $175, per application, as presented.

3. Consider Resolution No. 2022-03 – Adopting a Fiscal Year 2022/2023 Meeting Schedule

Mrs. Perez presented Resolution No. 2022-03, entitled:

RESOLUTION NO. 2022-03

A RESOLUTION OF THE BOARD OF SUPERVISORS OF THE SILVER PALMS COMMUNITY DEVELOPMENT DISTRICT, ESTABLISHING A REGULAR MEETING SCHEDULE FOR FISCAL YEAR 2022/2023 AND SETTING THE TIME AND LOCATION OF SAID DISTRICT MEETINGS; AND PROVIDING AN EFFECTIVE DATE.

Mrs. Perez read the title of the resolution into the record and noted that meetings would remain at the same location of the meeting room on the second floor of Mercedes Benz of Cutler Bay located at 10701 SW 211th Street, Cutler Bay, Florida 33189, with the start time of 6:00 p.m.

October 17, 2022 *Amended Budget*
January 16, 2023
April 17, 2023 *Proposed Budget*
June 19, 2023 *Final Budget*
September 18, 2023

A **MOTION** was made by Supervisor Ashley Riley, seconded by Supervisor Bryan Riley and unanimously passed adopting Resolution No. 2022-03, approving the Regular Meeting Schedule for Fiscal Year 2022-2023, as presented.

J. ADMINISTRATIVE MATTERS

1. Accept and Receive 2022 Annual Engineering Report

Mrs. Perez presented the Annual Engineer's Report. Mr. Alvarez reviewed the report, noting that the report was required pursuant to the Bond Trust Indenture.

A **MOTION** was made by Supervisor Bryan Riley, seconded by Supervisor Ashley Riley and unanimously passed accepting and receiving the 2022 Annual Engineer's Report, as presented.

2. Financial Update

Mrs. Perez presented the financials in the meeting book and briefly reviewed them with the Board, pointing that available funds as of May 31, 2022, were $240,719.23.

3. 2021 Form 1 – Statement of Financial Interests

Mrs. Perez reminded the Board that they should be receiving in the mail their 2021 Form 1 – Statement of Financial Interests and to complete and either mail or hand-deliver to the Supervisor of Elections' office no later than the July 1, 2022, deadline.

4. General Election and Candidate Qualifying Period

Mrs. Perez advised that the following incumbents qualified active and unopposed:

Seat 2 Omar Reyes
Seat 4 Ashley Riley
Seat 5 Bryan Riley

K. BOARD MEMBER/STAFF ADDITIONAL COMMENTS/REQUESTS

There were no further Board Member or Staff closing comments.

L. ADJOURNMENT

There being no further business to come before the Board, a **MOTION** was made by Supervisor Lisa Riley, seconded by Supervisor Zaiter and passed unanimously adjourning the meeting at 6:45 p.m.

ATTESTED BY:

Secretary/Assistant Secretary	**Chairperson/Vice-Chair**

From: Juan R. Alvarez <Juan.Alvarez@AlvarezEng.com>
Sent: Wednesday, July 6, 2022 3:13 PM
To: Gloria Perez <gperez@sdsinc.org>; Gregory F. George <GregoryG@bclmr.com>
Cc: Angel Camacho <Angel.Camacho@AlvarezEng.com>
Subject: Silver Palms CDD - Proposed Planting Criteria in the Lake Easement

Good afternoon, Gloria and Gregory:

Attached is a cross section showing the proposed criteria for limiting the planting of trees in the lake maintenance easement. As discussed at the last CDD meeting, the allowed planting would be limited to planting palms (except coconut trees) within the top 5 feet of the 20-foot lake easement.

As backup to our research of the easement, I am attaching the Paving, Grading and Drainage plans approved by Miami-Dade County DERM on May 21, 2003, and the plat for Silver Palm Lake recorded almost one year later, on April 16, 2004.

As you may see on the PGD plans, the lots adjacent to the lake were 20-ft shorter than shown in the plat, and the 20-foot-wide lake maintenance easement was intended to be outside, and adjacent to, the rear property line of the lots (Refer to Typical Lake Section "D" on sheet 7 of 9, and see the "Property Line" label located at the top of the bank, where the easement would begin). Please also see General Note # 8 on the first sheet of the PGD plans that says the geometric layout is to be performed in accordance with the final plat.

The final plat, recorded about a year after the PGD plans, extended the depth of the lots to incorporate the 20-foot lake easement into the lots, which is the situation that exists today. The former "Property Line" label in the PGD plans was changed to "Survey Tie Line" in the plat, and the name "20' Lake Maintenance Easement" in the PGD plans, was changed to "20' Stormwater Retention Easement (SWRE)" in the plat.

In our opinion, the maintenance entity of the 20-foot easement will need at least fifteen feet to properly maintain the stormwater retention lake and its banks, and could allow planting trees in the upper five feet, as long as they do not cast shade that kills the grass, such as palm trees, with the exception of coconut trees that drop nuts onto the banks and into the water, causing maintenance issues.

Please let me know if you would like to discuss this matter further.

Thank you,

Alvarez Engineers
Juan R. Alvarez, P.E.
(305) 640-1345
Juan.Alvarez@alvarezeng.com

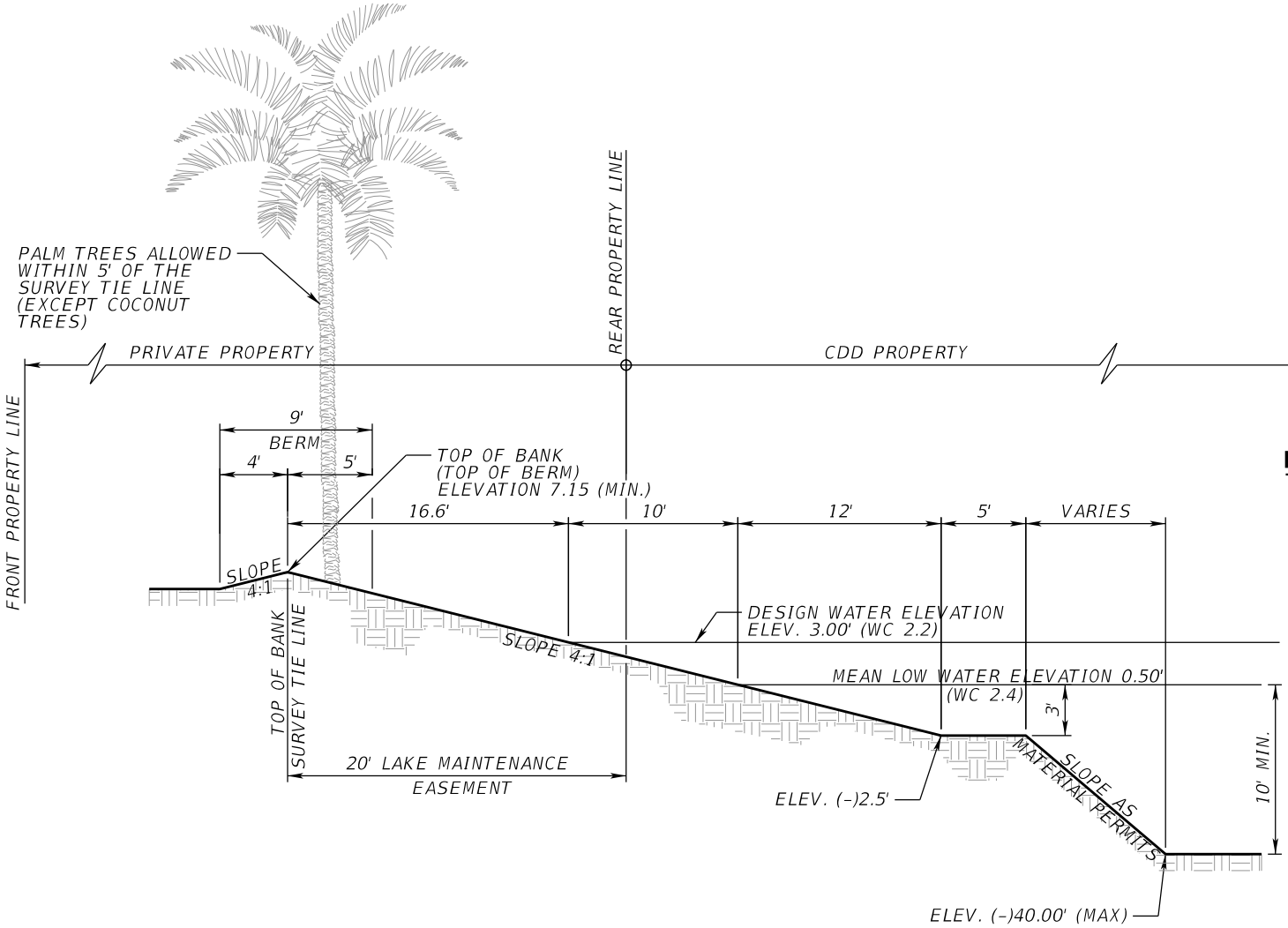

MAX. STORMWATER STAGE

100 YR - 72 HR
ELEV 7.40
25 YR - 72 HR
ELEV 6.98'

10 YR - 24 HR
ELEV 5.43'

RAINFALL DATA

100 YR	= 15" IN 72 HRS.
25 YR	= 11" IN 72 HRS.
10 YR	= 7" IN 24 HRS.

TYPICAL LAKE SECTION

ADJACENT TO LOT SCALE: 1"=10'

ALVAREZ ENGINEERS, INC.

0 2' 4' 10'

SILVER PALMS CDD - PLANTING CRITERIA WITHIN THE LAKE MAINTENANCE EASEMENT

TYPICAL LAKE SECTION ADJACENT TO PROPERTY LOTS

EXHIBIT 1

7/6/2022 P:\070804 - Silver Palms CDD (Yearly Report)\LAKE CROSS SECTION EXHIBIT\EXHIBIT-02.dgn

SILVER PALM LAKE

P. B. 161 PG. 71-
SHEET 1 OF 5

A SUBDIVISION OF A PORTION OF THE SOUTHEAST 1/4 OF THE SOUTHEAST 1/4 OF SECTION 18, TOWNSHIP 56 SOUTH, RANGE 40 EAST AND A PORTION OF THE SOUTHWEST 1/4 OF THE SOUTHWEST 1/4 OF SECTION 17, TOWNSHIP 56 SOUTH, RANGE 40 EAST MIAMI-DADE COUNTY, FLORIDA

PREPARED BY

E.R. BROWNELL & ASSOCIATES, INC.
CONSULTING ENGINEERS LAND SURVEYORS
3152 Coral Way Miami, Florida, 33145
PHONE: (305) 446-3511 FAX: (305) 444-2034

SCALE: 1"=50' Job No. 55465 AUGUST 2003

50 0 50 100 150
GRAPHIC SCALE

KNOW ALL BY THESE PRESENTS:

THAT "F & H DEVELOPMENT, L.L.C.", A FLORIDA LIMITED LIABILITY COMPANY, HAS CAUSED TO BE MADE THE ATTACHED PLAT ENTITLED "SILVER PALM LAKE", THE SAME BEING A SUBDIVISION OF THE FOLLOWING DESCRIBED PROPERTY:

LEGAL DESCRIPTION:

THE SOUTHEAST 1/4 OF THE SOUTHEAST 1/4 OF SECTION 18, TOWNSHIP 56 SOUTH, RANGE 40 EAST, MIAMI-DADE COUNTY, FLORIDA.

AND

THAT PORTION OF THE WEST 1/2 OF THE WEST 1/2 OF THE SOUTHWEST 1/4 OF THE SOUTHWEST 1/4 OF SECTION 17, TOWNSHIP 56 SOUTH, RANGE 40 EAST, LYING WESTERLY OF THE FOLLOWING DESCRIBED FLORIDA TURNPIKE RIGHT-OF-WAY:

COMMENCE AT THE SOUTHWEST CORNER OF SAID SECTION 17; THENCE NORTH 89°22'47" EAST ALONG THE SOUTH LINE OF SAID SECTION, AS A BASIS OF BEARINGS FOR 224.76 FEET TO THE INTERSECTION WITH THE WESTERLY RIGHT-OF-WAY LINE OF S.R. NO. 8.21 (FLORIDA'S TURNPIKE) AS SHOWN ON THE FLORIDA STATE DEPARTMENT OF TRANSPORTATION RIGHT-OF-WAY MAP, SECTION NO. 87005-2305, SAID POINT BEING THE POINT OF BEGINNING OF THE HEREIN DESCRIBED PARCEL OF LAND; THENCE NORTH 00°48'42" WEST ALONG SAID WEST RIGHT-OF-WAY LINE FOR 1332.49 FEET TO THE NORTH LINE OF SOUTHWEST 1/4 OF THE SOUTHWEST 1/4 OF SAID SECTION 17; THENCE NORTH 89°16'30" EAST ALONG THE NORTH LINE OF SOUTHWEST 1/4 OF THE SOUTHWEST 1/4 OF SAID SECTION 17 FOR 300.00 FEET TO THE INTERSECTION WITH THE EASTERLY LINE OF SAID S.R. NO. 821 (FLORIDA'S TURNPIKE); THENCE SOUTH 00°48'42" EAST FOR 1333.04 FEET TO THE SOUTH LINE OF THE SOUTHWEST 1/4 OF THE SOUTHWEST 1/4 OF SAID SECTION 17; THENCE SOUTH 89°22'47" WEST FOR 300.00 FEET TO THE POINT OF BEGINNING.

MIAMI-DADE COUNTY PLAT RESTRICTIONS:

THE AVENUES, COURT, PLACES, STREETS AND TERRACES AS SHOWN ON THE ATTACHED PLAT, TOGETHER WITH ALL EXISTING AND FUTURE PLANTING, TREES, SHRUBBERY, AND FIRE HYDRANTS THEREON ARE HEREBY DEDICATED TO THE PERPETUAL USE OF THE PUBLIC FOR PROPER PURPOSES, RESERVING TO THE DEDICATORS, THEIR SUCCESSORS OR ASSIGNS THE REVERSION OR REVERSIONS THEREOF, WHENEVER DISCONTINUED BY LAW.

NO INDIVIDUAL WELLS WILL BE PERMITTED WITHIN THIS SUBDIVISION EXCEPT FOR SWIMMING POOLS, SPRINKLER SYSTEMS AND/OR AIR CONDITIONERS.

THE USE OF SEPTIC TANKS WILL NOT BE PERMITTED ON ANY LOT WITHIN THIS SUBDIVISION UNLESS APPROVED FOR TEMPORARY USE IN ACCORDANCE WITH COUNTY AND/OR STATE REGULATIONS.

ALL NEW ELECTRIC AND COMMUNICATION LINES, EXCEPT TRANSMISSION LINES, WITHIN THIS SUBDIVISION, SHALL BE INSTALLED UNDERGROUND.

THE LIMITED ACCESS LINE AS SHOWN ON THE ATTACHED PLAT IS HEREBY DESIGNATED FOR THE EXPRESS PURPOSE OF PREVENTING DIRECT VEHICULAR ACCESS TO AND FROM THE ADJOINING ARTERIAL ROADS.

TRACT "A" AS SHOWN ON THE ATTACHED PLAT IS RESERVED AS A STORM WATER MANAGEMENT AREA AND SHALL BE OWNED AND MAINTAINED BY A MIAMI-DADE COUNTY APPROVED COMMUNITY DEVELOPMENT DISTRICT OR OWNED BY MIAMI-DADE COUNTY AND MAINTAINED BY A MIAMI-DADE COUNTY APPROVED SPECIAL TAXING DISTRICT.

TRACTS "B", "C", "D" AND "E", AS SHOWN ON THE ATTACHED PLAT ARE RESERVED FOR COMMON AREA FOR THE JOINT AND SEVERAL USE OF PROPERTY OWNERS WITHIN THIS SUBDIVISION AND FOR THE INSTALLATION AND MAINTENANCE OF PUBLIC UTILITIES, AND SHALL BE OWNED AND MAINTAINED IN ACCORDANCE WITH A MIAMI-DADE COUNTY APPROVED COMMUNITY DEVELOPMENT DISTRICT OR OWNED BY MIAMI-DADE COUNTY AND MAINTAINED BY A MIAMI-DADE COUNTY APPROVED SPECIAL TAXING DISTRICT.

TRACT "F" AS SHOWN ON THIS PLAT IS HEREBY DEDICATED TO THE MIAMI-DADE WATER AND SEWER DEPARTMENT FOR ACCESS TO A SANITARY LIFT STATION.

THE STORM WATER RETENTION EASEMENTS (SWRE) LYING BETWEEN THE SURVEY TIE LINE AND THE REAR OF CERTAIN LOTS OR THE STORM WATER MANAGEMENT AREA TRACT LINE ARE RESERVED FOR THE STORAGE OF STORM WATER DISCHARGE. THE STORM WATER RETENTION EASEMENT AREA AS SHOWN LIES OUTSIDE OF THE BUILDABLE AREA OF THE LOT AND TRACT AND SHALL BE KEPT CLEAR OF STRUCTURES.

THE AREAS ADJACENT TO THE STORM WATER MANAGEMENT AREA ARE TO BE GRADED SO AS TO PREVENT OVERLAND DISCHARGE INTO THE STORM WATER MANAGEMENT AREA.

OWNERS PLAT RESTRICTIONS:

THE UTILITY EASEMENTS AT THE SIDES, FRONT AND REAR OF CERTAIN LOTS AS SHOWN BY DASHED LINES ON THE ATTACHED PLAT ARE HEREBY RESERVED FOR THE INSTALLATION AND MAINTENANCE OF PUBLIC UTILITIES.

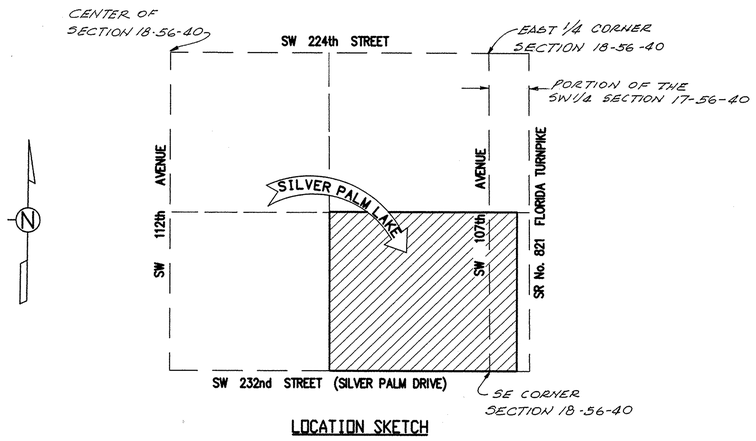

LOCATION SKETCH

SOUTHEAST 1/4 OF SECTION 18, TOWNSHIP 56 SOUTH, RANGE 40 EAST AND A PORTION OF THE SOUTHWEST 1/4 OF SECTION 17, TOWNSHIP 56 SOUTH, RANGE 40 EAST

SCALE: 1" = 600'

IN WITNESS WHEREOF:

THE SAID "F & H DEVELOPMENT, L.L.C.", A FLORIDA LIMITED LIABILITY COMPANY, HAS CAUSED THESE PRESENTS TO BE SIGNED FOR AND ON ITS BEHALF BY ITS MANAGING MEMBER THIS 15th DAY OF SEPTEMBER, A.D., 2003. AND ITS COMPANY SEAL TO BE HEREUNTO AFFIXED IN THE PRESENCE OF THESE TWO WITNESSES.

F & H DEVELOPMENT, L.L.C.
A FLORIDA LIMITED LIABILITY COMPANY

WITNESSES:

BY: Jose Fano
JOSE FANO, MANAGING MEMBER

"F & H DEVELOPMENT, L.L.C." SEAL

ACKNOWLEDGMENT:

STATE OF FLORIDA}
COUNTY OF MIAMI-DADE} SS:

I HEREBY CERTIFY: THAT ON THIS DAY PERSONALLY APPEARED BEFORE ME, AN OFFICER DULY AUTHORIZED TO ADMINISTER OATHS AND TAKE ACKNOWLEDGMENTS, JOSE FANO, MANAGING MEMBER OF "F & H DEVELOPMENT, L.L.C.", A FLORIDA LIMITED LIABILITY COMPANY, WHO IS PERSONALLY KNOWN TO ME AND WHO EXECUTED THE FOREGOING INSTRUMENT FREELY AND VOLUNTARILY FOR THE PURPOSES THEREIN EXPRESSED AND WHO DID NOT TAKE AN OATH.

WITNESS MY HAND AND OFFICIAL SEAL THIS 15 DAY OF SEPTEMBER, A.D., 2003.

MY COMMISSION EXPIRES: June 1, 2006 BY:

CINTIA L. O'REILLY
MY COMMISSION # DD 089993
EXPIRES: June 1, 2006
Bonded Thru Budget Notary Services

CINTIA L. O'REILLY
PRINTED NAME OF ACKNOWLEDGER
NOTARY PUBLIC, STATE OF FLORIDA AT LARGE
COMMISSION NUMBER: DD 089993

SURVEYOR'S CERTIFICATION:

I HEREBY CERTIFY: THAT THE ATTACHED PLAT ENTITLED "SILVER PALM LAKE", IS A TRUE AND CORRECT REPRESENTATION OF THE LANDS AS RECENTLY SURVEYED AND PLATTED UNDER MY DIRECTION; THAT THE SURVEY DATA AS SHOWN ON THIS PLAT COMPLIES WITH THE APPLICABLE REQUIREMENTS OF CHAPTER 177, PART I, FLORIDA STATUTES, AND THAT PERMANENT REFERENCE MONUMENTS HAVE BEEN SET.

E. R. BROWNELL & ASSOCIATES, INC.
3152 CORAL WAY, MIAMI, FLORIDA 33145
CERTIFICATE OF AUTHORIZATION NO. LB 761

BY: Thomas Brownell
THOMAS BROWNELL, EXEC. VICE PRESIDENT
PROFESSIONAL LAND SURVEYOR #2891
STATE OF FLORIDA

CFN 2004R0269992
PLT Bk 00161 Pg 00071 (1pg)
RECORDED 04/16/2004 11:03:03
HARVEY RUVIN, CLERK OF COURT
MIAMI-DADE COUNTY, FLORIDA
LAST PAGE

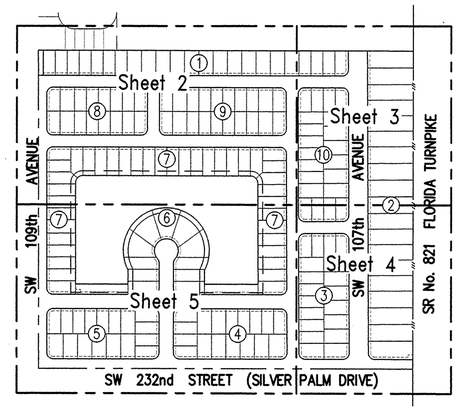

KEY MAP
SCALE: 1" = 300'

MORTGAGE:

KNOW ALL MEN BY THESE PRESENTS: THAT BANK OF AMERICA, N.A., A NATIONAL BANKING ASSOCIATION, THE OWNER AND HOLDER OF THAT CERTAIN MORTGAGE DATED MARCH 12, 2003 AND RECORDED MARCH 13, 2003, IN OFFICIAL RECORDS BOOK 21094, PAGE 2304 UNDER CLERK'S FILE NUMBER 03R173190, OF THE PUBLIC RECORDS OF MIAMI-DADE COUNTY, FLORIDA, DOES HEREBY CONSENT TO THIS PLAT AND JOINS IN THE ABOVE DEDICATIONS.

IN WITNESS WHEREOF:

BANK OF AMERICA, N.A., A NATIONAL BANKING ASSOCIATION, HAS CAUSED THESE PRESENTS TO BE SIGNED FOR AND ON ITS BEHALF BY ITS VICE PRESIDENT AND IT'S CORPORATE SEAL TO BE HEREUNTO AFFIXED AND ATTESTED BY ITS VICE PRESIDENT THIS 16th DAY OF September, A.D., 2003.

BANK OF AMERICA, N.A

ATTESTED: John Nichols VP
JOHN NICHOLS, VICE PRESIDENT

BY: Evita Francuz
EVITA FRANCUZ, VICE PRESIDENT

ACKNOWLEDGMENT:

STATE OF FLORIDA}
COUNTY OF MIAMI-DADE} SS:

I HEREBY CERTIFY: THAT ON THIS DAY PERSONALLY APPEARED BEFORE ME, AN OFFICER DULY AUTHORIZED TO ADMINISTER OATHS AND TAKE ACKNOWLEDGMENTS, EVITA FRANCUZ, VICE PRESIDENT, AND JOHN NICHOLS, VICE PRESIDENT OF BANK OF AMERICA, N.A. CORPORATION WHO ARE PERSONALLY KNOWN TO ME AND WHO EXECUTED THE FOREGOING INSTRUMENT FREELY AND VOLUNTARILY FOR THE PURPOSES THEREIN EXPRESSED AND WHO DID NOT TAKE AN OATH.

WITNESS MY HAND AND OFFICIAL SEAL THIS 16th DAY OF September, A.D., 2003.

MY COMMISSION EXPIRES: JUNE 8/07 BY: Nellie Lima

NELLIE LIMA
Notary Public - State of Florida
My Commission Expires Jun 8, 2007
Commission # DD199581
Bonded By National Notary Assn.

Nellie Lima
PRINTED NAME OF ACKNOWLEDGER
NOTARY PUBLIC, STATE OF FLORIDA AT LARGE
COMMISSION NUMBER: DD199581

MIAMI-DADE COUNTY APPROVALS:

THIS PLAT WAS APPROVED BY THE MIAMI-DADE COUNTY, FLORIDA DEPARTMENT OF PLANNING AND ZONING THIS 28 DAY OF JANUARY, A.D., 2004 THE SIZE OF THE LOTS, TRACTS AND OTHER FEATURES AS SHOWN ON THIS PLAT CONFORM TO ALL REQUIREMENTS OF THE EXISTING ZONING AS OF THIS DATE.

BY: Diani Ocalh DIRECTOR

THIS PLAT WAS APPROVED BY THE MIAMI-DADE COUNTY, FLORIDA PUBLIC WORKS DEPARTMENT THIS 9 DAY OF March, A.D., 2004 THIS PLAT HAS BEEN REVIEWED BY A PROFESSIONAL SURVEYOR AND MAPPER EMPLOYED BY MIAMI-DADE COUNTY IN ACCORDANCE WITH SECTION 177.081(1) OF THE FLORIDA STATUTES.

BY: DIRECTOR

THIS PLAT HAS BEEN FOUND TO BE IN COMPLIANCE WITH THE REQUIREMENTS OF CHAPTER 33-G CODE OF MIAMI-DADE COUNTY, SUBJECT TO ALL THE CONDITIONS OF THE CONCURRENCY REVIEW AGENCIES AND SAID CHAPTER 33-G. THIS PLAT WAS APPROVED AND THE FOREGOING DEDICATIONS WERE ACCEPTED AND APPROVED BY RESOLUTION NO. R-214-04 PASSED AND ADOPTED BY THE BOARD OF COUNTY COMMISSIONERS OF MIAMI-DADE COUNTY, FLORIDA THIS 17th DAY OF February, A.D., 2004

BOARD OF COUNTY COMMISSIONERS

ATTEST: CLERK OF THE CIRCUIT COURT

DEPUTY CLERK SIGNED: MAYOR

RECORDING STATEMENT:

FILED FOR RECORD THIS 16TH DAY OF APRIL, A.D., 2004 AT 11 : 03 A.M., IN BOOK 161 OF PLATS, AT PAGE 71-72 OF THE PUBLIC RECORDS OF MIAMI-DADE COUNTY, FLORIDA. THIS PLAT COMPLIES WITH THE LAWS OF THE STATE OF FLORIDA AND MIAMI-DADE COUNTY, FLORIDA.

HARVEY RUVIN, CLERK OF CIRCUIT COURT

BY: DEPUTY CLERK

SILVER PALM LAKE

A SUBDIVISION OF A PORTION OF THE SOUTHEAST 1/4 OF THE SOUTHEAST 1/4 OF SECTION 18, TOWNSHIP 56 SOUTH, RANGE 40 EAST AND A PORTION OF THE SOUTHWEST 1/4 OF THE SOUTHWEST 1/4 OF SECTION 17, TOWNSHIP 56 SOUTH, RANGE 40 EAST MIAMI-DADE COUNTY, FLORIDA

P. B. 161 PG. 71²
SHEET 2 OF 5

PREPARED BY

E.R. BROWNELL & ASSOCIATES, INC.
CONSULTING ENGINEERS
3152 Coral Way
PHONE: (305) 446-3511
LAND SURVEYORS
Miami, Florida, 33145
FAX: (305) 444-2034

SCALE: 1"=50' Job No. 55465 AUGUST 2003

50 0 50 100 150
GRAPHIC SCALE

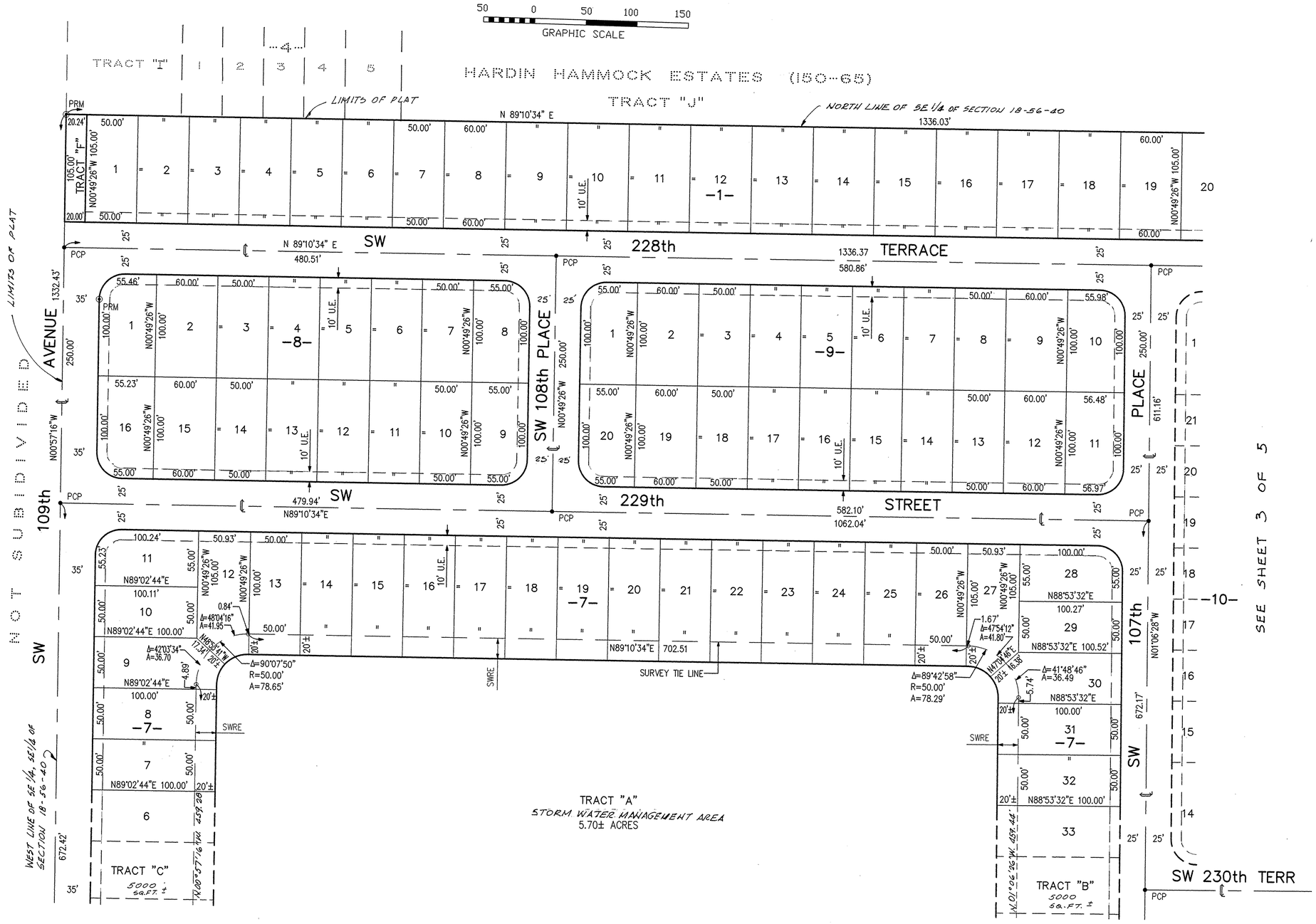

SEE SHEET 5 of 5

AREA TABULATION:

BLOCK	LOT	AREA SQ. FT±	AREA ACRES
TRACT "F"			0.048
BLOCK-7	LOT-9	5210*	
	LOT-11	5386	
	LOT-12	5422*	
	LOT-27	5415*	
	LOT-28	5400	
	LOT-30	5206*	
BLOCK-8	LOT-1	5399	
	LOT-8	5366	
	LOT-9	5366	
	LOT-16	5378	
BLOCK-9	LOT-1	5366	
	LOT-10	5490	
	LOT-11	5537	
	LOT-20	5366	

*AREAS CALCULATED TO SURVEY TIE LINE (APPROXIMATE TOP OF BANK)

NOTICE: THIS PLAT AS RECORDED IN ITS GRAPHIC FORM, IS THE OFFICIAL DEPICTION OF THE SUBDIVIDED LANDS DESCRIBED HEREIN AND WILL IN NO CIRCUMSTANCES BE SUPPLANTED IN AUTHORITY BY ANY OTHER GRAPHIC OR DIGITAL FORM OF THE PLAT. THERE MAY BE ADDITIONAL RESTRICTIONS THAT ARE NOT RECORDED ON THIS PLAT THAT MAY BE FOUND IN THE PUBLIC RECORDS OF THIS COUNTY.

SURVEYORS NOTES:

℄ DENOTES CENTERLINE
§ DENOTES SECTION LINE
⊙ P. R. M. DENOTES PERMANENT REFERENCE MONUMENT
• P. C. P. DENOTES PERMANENT CONTROL POINT
R DENOTES RADIUS
Δ DENOTES DELTA
A DENOTES ARC LENGTH
SWRE DENOTES STORM WATER RETENTION EASEMENT
LA R/W LIMITED ACCESS RIGHT-OF-WAY LINE
DENOTES LIMITED ACCRESS RIGHT-OF-WAY LINE
10' UE DENOTES UTILITY EASEMENT

P.O.C. DENOTES POINT OF COMMENCEMENT
P.O.B. DENOTES POINT OF BEGINNING
P.B. DENOTES PLAT BOOK
PG. DENOTES PAGE

BEARINGS ARE BASED ON AN ASSUMED MERIDIAN, WHERE THE SOUTH LINE OF THE SW 1/4 OF SAID SECTION 17 BEARS NORTH 89°22'47" EAST.

ALL RADII ARE 25.00 FEET, UNLESS OTHERWISE SHOWN.

DIMENSIONS OF CORNER LOTS ARE TO THE INTERSECTION OF BLOCK LINES EXTENDED, UNLESS OTHERWISE SHOWN.

RECORDING STATEMENT:

FILED FOR RECORD THIS 16TH DAY OF APRIL A. D., 2004, AT 11 : 03 A. M., IN BOOK 161 OF PLATS, AT PAGE 71 OF THE PUBLIC RECORDS OF MIAMI-DADE COUNTY, FLORIDA. THIS PLAT COMPLIES WITH THE LAWS OF THE STATE OF FLORIDA AND MIAMI-DADE COUNTY, FLORIDA.

20040269992

HARVEY RUVIN, CLERK OF CIRCUIT COURT

BY: _____ DEPUTY CLERK

SILVER PALM LAKE

P. B. 161 PG. 71³
SHEET 3 OF 5

A SUBDIVISION OF A PORTION OF THE SOUTHEAST 1/4 OF THE SOUTHEAST 1/4 OF SECTION 18, TOWNSHIP 56 SOUTH, RANGE 40 EAST AND A PORTION OF THE SOUTHWEST 1/4 OF THE SOUTHWEST 1/4 OF SECTION 17, TOWNSHIP 56 SOUTH, RANGE 40 EAST MIAMI-DADE COUNTY, FLORIDA

PREPARED BY

E.R. BROWNELL & ASSOCIATES, INC.
CONSULTING ENGINEERS
3152 Coral Way
PHONE: (305) 446-3511
LAND SURVEYORS
Miami, Florida, 33145
FAX: (305) 444-2034

SCALE: 1"=50' Job No. 55465 AUGUST 2003

50 0 50 100 150
GRAPHIC SCALE

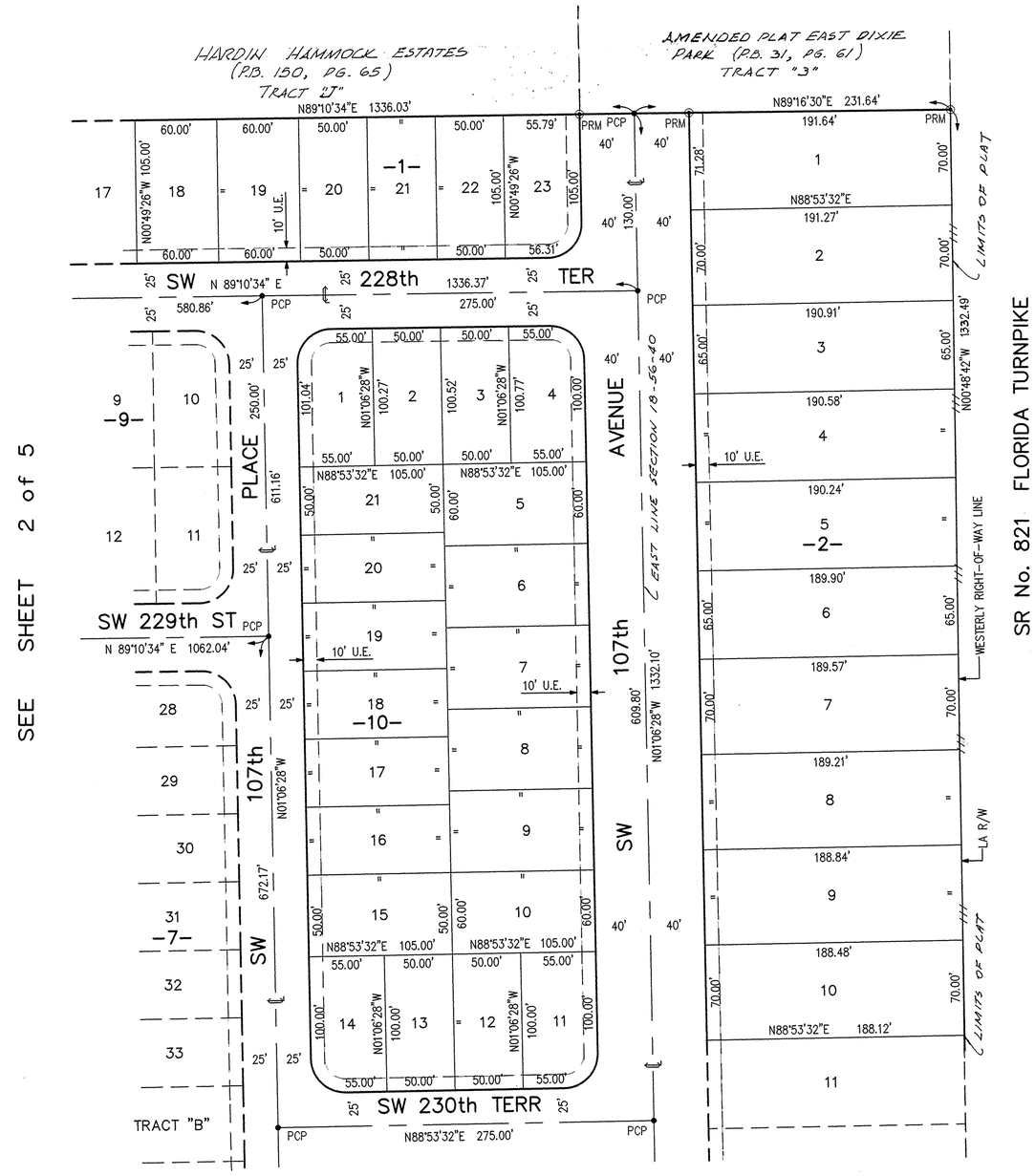

AREA TABULATION:

BLOCK	LOT	AREA
BLOCK-1	LOT-23	5749
BLOCK-2	LOT-1	13524
	LOT-2	13377
	LOT-3	12398
	LOT-4	12377
	LOT-5	12355
	LOT-6	12333
	LOT-7	13257
	LOT-8	13232
	LOT-9	13206
	LOT-10	13181
BLOCK-9	LOT-1	5366
	LOT-10	5490
	LOT-11	5537
	LOT-20	5366

NOTICE: THIS PLAT AS RECORDED IN ITS GRAPHIC FORM, IS THE OFFICIAL DEPICTION OF THE SUBDIVIDED LANDS DESCRIBED HEREIN AND WILL IN NO CIRCUMSTANCES BE SUPPLANTED IN AUTHORITY BY ANY OTHER GRAPHIC OR DIGITAL FORM OF THE PLAT. THERE MAY BE ADDITIONAL RESTRICTIONS THAT ARE NOT RECORDED ON THIS PLAT THAT MAY BE FOUND IN THE PUBLIC RECORDS OF THIS COUNTY.

SURVEYORS NOTES:

℄	DENOTES CENTERLINE
§	DENOTES SECTION LINE
◉ P. R. M.	DENOTES PERMANENT REFERENCE MONUMENT
• P. C. P.	DENOTES PERMANENT CONTROL POINT
R	DENOTES RADIUS
Δ	DENOTES DELTA
A	DENOTES ARC LENGTH
SWRE	DENOTES STORM WATER RETENTION EASEMENT
LA R/W	LIMITED ACCESS RIGHT-OF-WAY LINE
——///——	DENOTES LIMITED ACCRESS RIGHT-OF-WAY LINE
⊣ ⊢ 10' UE	DENOTES UTILITY EASEMENT
P.O.C.	DENOTES POINT OF COMMENCEMENT
P.O.B.	DENOTES POINT OF BEGINNING
P.B.	DENOTES PLAT BOOK
PG	DENOTES PAGE

BEARINGS ARE BASED ON AN ASSUMED MERIDIAN, WHERE THE SOUTH LINE OF THE SW 1/4 OF SAID SECTION 17 BEARS NORTH 89°22'47" EAST.

ALL RADII ARE 25.00 FEET, UNLESS OTHERWISE SHOWN.

DIMENSIONS OF CORNER LOTS ARE TO THE INTERSECTION OF BLOCK LINES EXTENDED, UNLESS OTHERWISE SHOWN.

RECORDING STATEMENT:

FILED FOR RECORD THIS 16TH DAY OF APRIL A. D., 2004 AT 11 : 03 A. M., IN BOOK 161 OF PLATS, AT PAGE 71 thru OF THE PUBLIC RECORDS OF MIAMI-DADE COUNTY, FLORIDA. THIS PLAT COMPLIES WITH THE LAWS OF THE STATE OF FLORIDA AND MIAMI-DADE COUNTY, FLORIDA.

20040269992

HARVEY RUVIN, CLERK OF CIRCUIT COURT

BY: _____ DEPUTY CLERK

SILVER PALM LAKE

P. B. 161 PG. 71-4
SHEET 4 OF 5

A SUBDIVISION OF A PORTION OF THE SOUTHEAST 1/4 OF THE SOUTHEAST 1/4 OF SECTION 18, TOWNSHIP 56 SOUTH, RANGE 40 EAST AND A PORTION OF THE SOUTHWEST 1/4 OF THE SOUTHWEST 1/4 OF SECTION 17, TOWNSHIP 56 SOUTH, RANGE 40 EAST MIAMI-DADE COUNTY, FLORIDA

PREPARED BY

E.R. BROWNELL & ASSOCIATES, INC.
CONSULTING ENGINEERS
3152 Coral Way
PHONE: (305) 446-3511

LAND SURVEYORS
Miami, Florida, 33145
FAX: (305) 444-2034

SCALE: 1"=50' Job No. 55465 AUGUST 2003

50 0 50 100 150
GRAPHIC SCALE

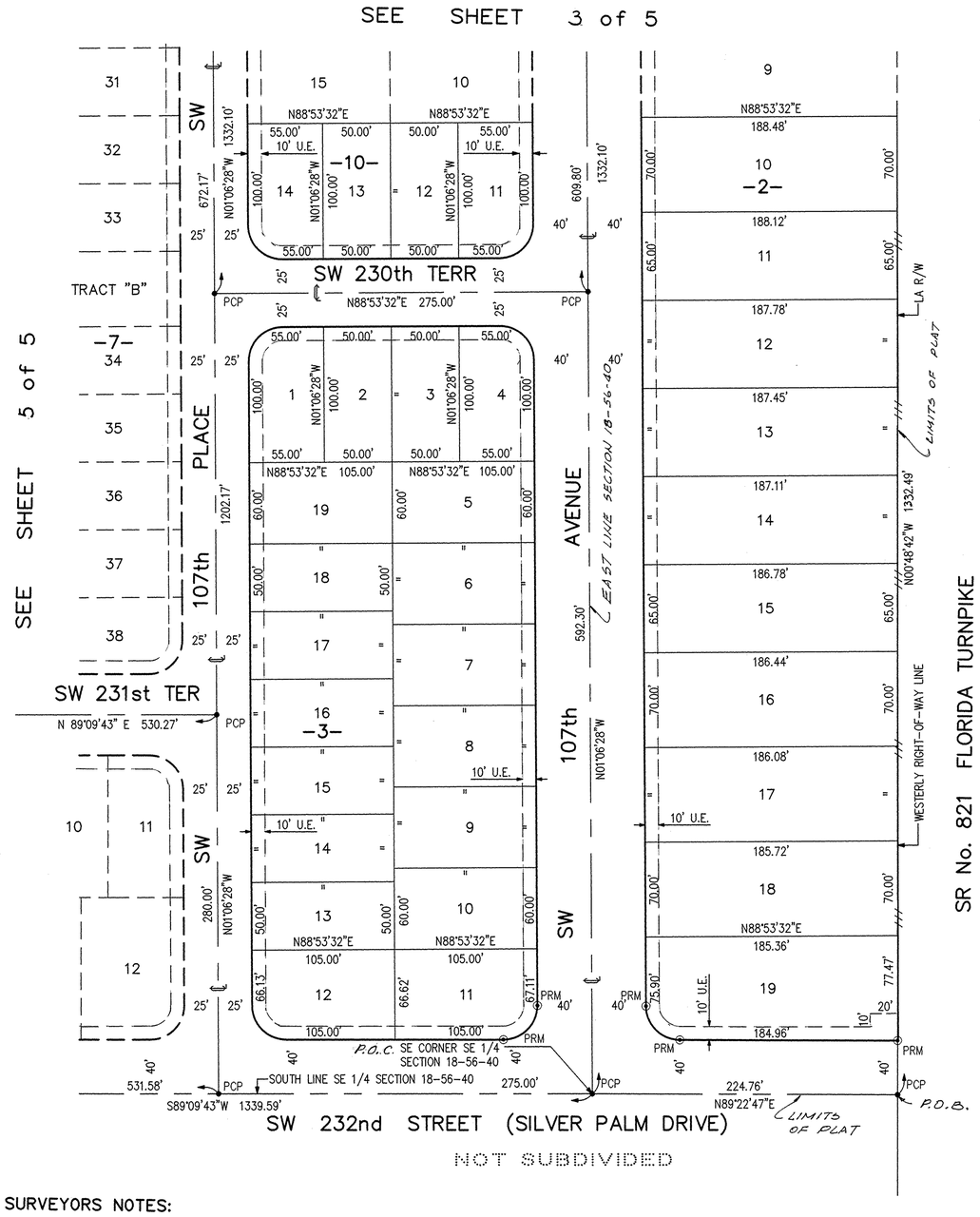

AREA TABULATION:

BLOCK	LOT	AREA
BLOCK-2	LOT-10	13181
	LOT-11	12217
	LOT-12	12195
	LOT-13	12173
	LOT-14	12151
	LOT-15	12130
	LOT-16	13038
	LOT-17	13013
	LOT-18	12988
	LOT-19	14068
BLOCK-3	LOT-1	5366
	LOT-4	5366
	LOT-11	6886
	LOT-12	6837
BLOCK-10	LOT-11	5366
	LOT-14	5366

NOTICE: THIS PLAT AS RECORDED IN ITS GRAPHIC FORM, IS THE OFFICIAL DEPICTION OF THE SUBDIVIDED LANDS DESCRIBED HEREIN AND WILL IN NO CIRCUMSTANCES BE SUPPLANTED IN AUTHORITY BY ANY OTHER GRAPHIC OR DIGITAL FORM OF THE PLAT. THERE MAY BE ADDITIONAL RESTRICTIONS THAT ARE NOT RECORDED ON THIS PLAT THAT MAY BE FOUND IN THE PUBLIC RECORDS OF THIS COUNTY.

SURVEYORS NOTES:

℄	DENOTES CENTERLINE
⅊	DENOTES SECTION LINE
◉ P. R. M.	DENOTES PERMANENT REFERENCE MONUMENT
• P. C. P.	DENOTES PERMANENT CONTROL POINT
R	DENOTES RADIUS
Δ	DENOTES DELTA
A	DENOTES ARC LENGTH
SWRE	DENOTES STORM WATER RETENTION EASEMENT
LA R/W	LIMITED ACCESS RIGHT-OF-WAY LINE
——///	DENOTES LIMITED ACCRESS RIGHT-OF-WAY LINE
┤├ 10' UE	DENOTES UTILITY EASEMENT

P.O.C.	DENOTES POINT OF COMMENCEMENT
P.O.B.	DENOTES POINT OF BEGINNING
P.B.	DENOTES PLAT BOOK
PG.	DENOTES PAGE

BEARINGS ARE BASED ON AN ASSUMED MERIDIAN, WHERE THE SOUTH LINE OF THE SW 1/4 OF SAID SECTION 17 BEARS NORTH 89° 22' 47" EAST

ALL RADII ARE 25.00 FEET, UNLESS OTHERWISE SHOWN.

DIMENSIONS OF CORNER LOTS ARE TO THE INTERSECTION OF BLOCK LINES EXTENDED, UNLESS OTHERWISE SHOWN.

RECORDING STATEMENT:

FILED FOR RECORD THIS 16TH DAY OF APRIL A. D. 2004, AT 11 : 03 A. M., IN BOOK 161 OF PLATS, AT PAGE 71-4 OF THE PUBLIC RECORDS OF MIAMI-DADE COUNTY, FLORIDA. THIS PLAT COMPLIES WITH THE LAWS OF THE STATE OF FLORIDA AND MIAMI-DADE COUNTY, FLORIDA.

HARVEY RUVIN, CLERK OF CIRCUIT COURT

20040269992

BY: _____ DEPUTY CLERK

SILVER PALM LAKE

A SUBDIVISION OF A PORTION OF THE SOUTHEAST 1/4 OF THE SOUTHEAST 1/4 OF SECTION 18, TOWNSHIP 56 SOUTH, RANGE 40 EAST AND A PORTION OF THE SOUTHWEST 1/4 OF THE SOUTHWEST 1/4 OF SECTION 17, TOWNSHIP 56 SOUTH, RANGE 40 EAST MIAMI-DADE COUNTY, FLORIDA

PREPARED BY

E.R. BROWNELL & ASSOCIATES, INC.
CONSULTING ENGINEERS
3152 Coral Way
PHONE: (305) 446-3511
LAND SURVEYORS
Miami, Florida, 33145
FAX: (305) 444-2034

SCALE: 1"=50' Job No. 55465 AUGUST 2003

50 0 50 100 150
GRAPHIC SCALE

SEE SHEET 2 of 5

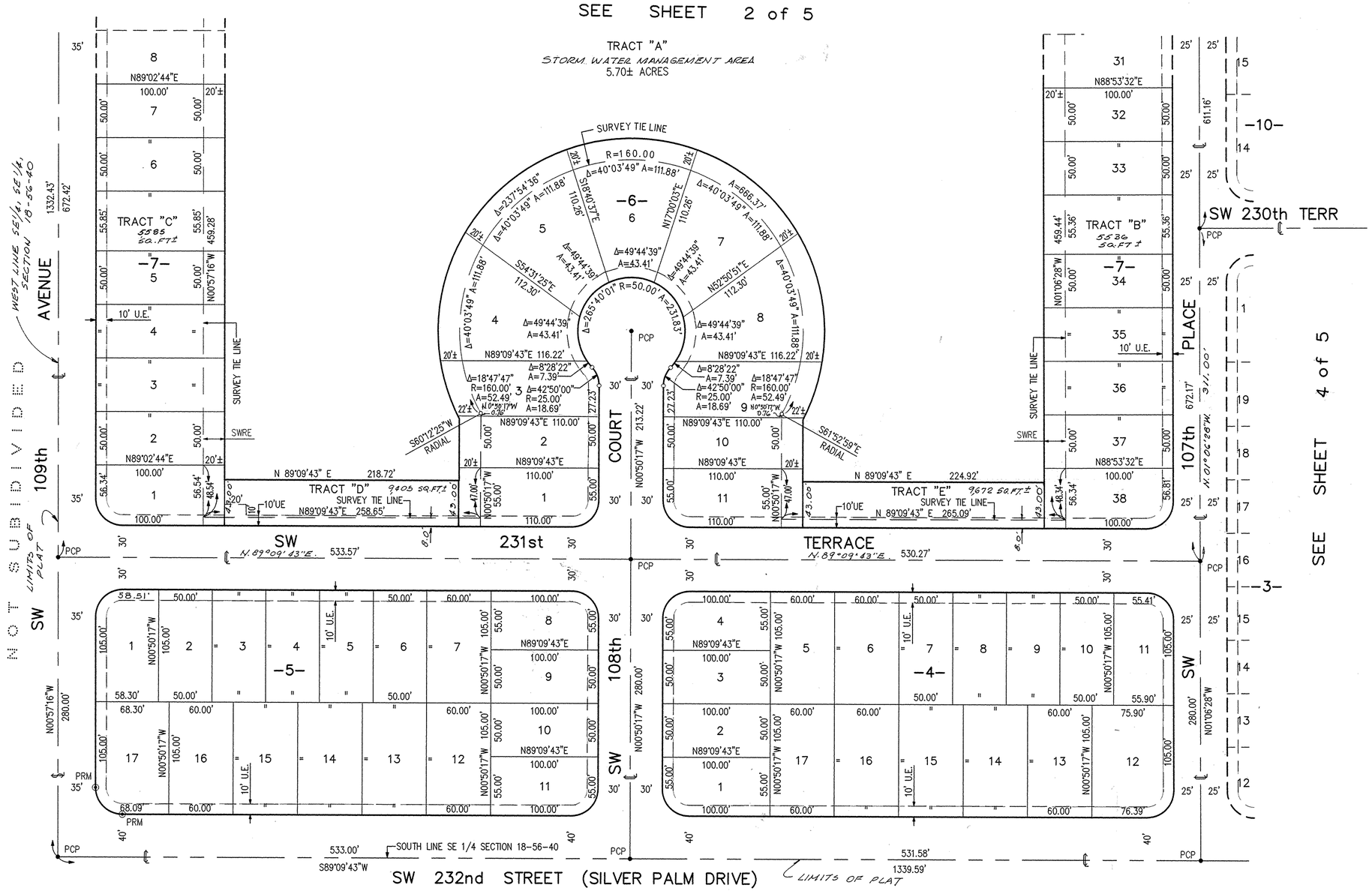

AREA TABULATION:

BLOCK	LOT	AREA
BLOCK-4	LOT-1	5366
	LOT-4	5366
	LOT-11	5711
	LOT-12	7860
BLOCK-5	LOT-1	5998
	LOT-8	5366
	LOT-11	5366
	LOT-17	7027
BLOCK-6	LOT-1	5916
	LOT-3	5918
	LOT-4	8502
	LOT-5	8530
	LOT-6	8540
	LOT-7	8530
	LOT-8	8502
	LOT-9	5918
	LOT-11	5916
BLOCK-7	LOT-1	5511
	LOT-38	5522

*AREAS CALCULATED TO SURVEY TIE LINE (APPROXIMATE TOP OF BANK)

NOTICE: THIS PLAT AS RECORDED IN ITS GRAPHIC FORM, IS THE OFFICIAL DEPICTION OF THE SUBDIVIDED LANDS DESCRIBED HEREIN AND WILL IN NO CIRCUMSTANCES BE SUPPLANTED IN AUTHORITY BY ANY OTHER GRAPHIC OR DIGITAL FORM OF THE PLAT. THERE MAY BE ADDITIONAL RESTRICTIONS THAT ARE NOT RECORDED ON THIS PLAT THAT MAY BE FOUND IN THE PUBLIC RECORDS OF THIS COUNTY.

SURVEYORS NOTES:

℄	DENOTES CENTERLINE
⅊	DENOTES SECTION LINE
◉ P. R. M.	DENOTES PERMANENT REFERENCE MONUMENT
• P. C. P.	DENOTES PERMANENT CONTROL POINT
R	DENOTES RADIUS
Δ	DENOTES DELTA
A	DENOTES ARC LENGTH
SWRE	DENOTES STORM WATER RETENTION EASEMENT
LA R/W	LIMITED ACCESS RIGHT-OF-WAY LINE
——///——	DENOTES LIMITED ACCRESS RIGHT-OF-WAY LINE
┤├ 10' UE	DENOTES UTILITY EASEMENT

P.O.C.	DENOTES POINT OF COMMENCEMENT
P.O.B.	DENOTES POINT OF BEGINNING
P.B.	DENOTES PLAT BOOK
PG.	DENOTES PAGE

BEARINGS ARE BASED ON AN ASSUMED MERIDIAN, WHERE THE SOUTH LINE OF THE S.W 1/4 OF SAID SECTION 17 BEARS NORTH 89°22' 42" EAST.

ALL RADII ARE 25.00 FEET, UNLESS OTHERWISE SHOWN.

DIMENSIONS OF CORNER LOTS ARE TO THE INTERSECTION OF BLOCK LINES EXTENDED, UNLESS OTHERWISE SHOWN.

RECORDING STATEMENT:

FILED FOR RECORD THIS 16TH DAY OF APRIL A. D., 2004 AT 11 : 03 A M., IN BOOK 161 OF PLATS, AT PAGE 71 OF THE PUBLIC RECORDS OF MIAMI-DADE COUNTY, FLORIDA. THIS PLAT COMPLIES WITH THE LAWS OF THE STATE OF FLORIDA AND MIAMI-DADE COUNTY, FLORIDA.

HARVEY RUVIN, CLERK OF CIRCUIT COURT

BY: _____ DEPUTY CLERK

20040269992

Silver Palm Lake

Paving, Grading and Drainage Plan

Dade County Department of
ENVIRONMENTAL RESOURCES MANAGEMENT
Water Control Section

DERM APPROVED PLANS FOR SURFACE WATER MANAGEMENT PERMIT NO. 13-02055-P.

CHECK	RECEIPT NO.	
WA	030522-1	
Date 5/21/03		

TRAFFIC GENERAL NOTES & CONDITIONS

1) Engineer shall prepare signing & pavement markings plans in a separate sheet (1"=50' scale minimum)
2) Engineer shall visit site & verify field conditions before preparing proposed signing & pavement markings plans.
3) Contractor shall be responsible for the removal of all pavement markings and signs conflicting with the proposed roadway construction.
4) Contractor shall be responsible for the installation of all pavement markings and signs as shown in the plans and applicable traffic design standards.
5) Contractor shall be responsible for matching existing pavement markings at the beginning and at the end of the project, and at all intersecting side streets.
6) Contractor shall be responsible for the installation of reflective pavement markers along the entire length of the project.
7) Any signing material, including supports to be removed, shall be delivered by the contractor to Miami-Dade County's Traffic Signals and Signs Maintenance Facility located at 7100 N.W. 36th Street, Miami, Florida.
8) Sign assembly locations shown in the plans which are in conflict with street lighting utilities, driveways, pedestrian ramps, etc. may be adjusted as directed by the Engineer / Inspector.

DRAINAGE STRUCTURES DATA:

1. Drainage trenches shall be "Exfiltration Trench" type as per Standard Detail SD 1.1.
2. All catch basins shall be Type "P" or "J" (SD 2.6). Frames shall be as per Miami-Dade County Standard Detail SD 2.3 (1 of 2). Bottom elevations of inlets shall be set as shown on Drainage Structure Table (Sheet P-04)
3. Exfiltration trenches shall be 15 feet deep, 3 feet wide with 15" perforated High Density Polyethylene (HDPE) pipe. Pipe invert elevations shall be set in accordance with Drainage Structure Table (Sheet P-04).

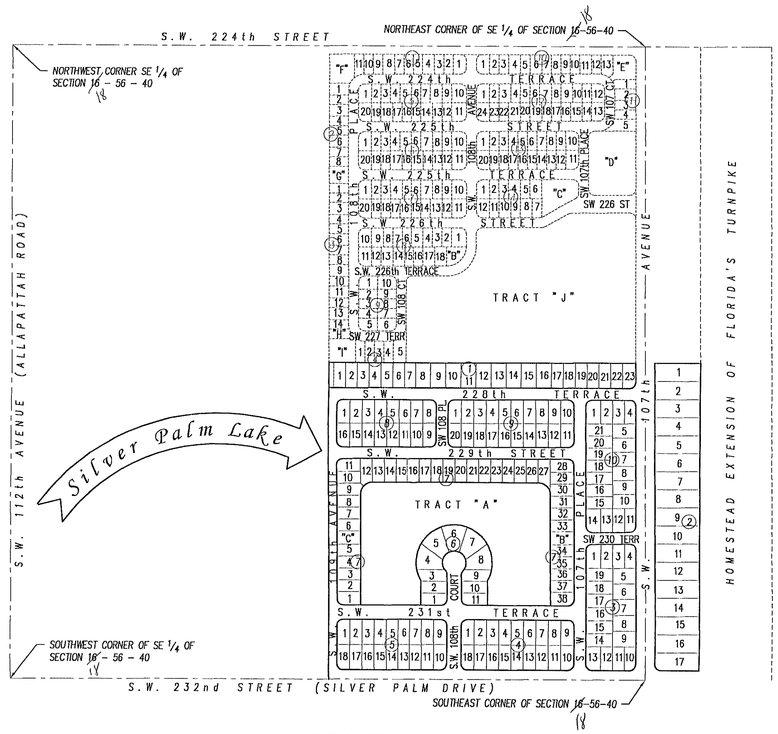

LOCATION MAP

THE SOUTHEAST 1/4 OF
SECTION 16, TOWNSHIP 56 SOUTH, RANGE 40 EAST
MIAMI-DADE COUNTY, FLORIDA
SCALE: 1" = 300'

LEGEND

- EXISTING PAVEMENT
- PROPOSED PAVEMENT
- 25 LF — PROPOSED CATCH BASIN w/ FRENCH DRAIN TRENCH
- PROP. P-6 TYPE CURB INLET
- S-XXX — DRAINAGE STRUCTURE NUMBER
- 2A — JUNCTION BOX
- OUTFALL CONTROL STRUCTURE
- R1-1 — EXISTING CATCH BASIN
- D3-1 — TRAFFIC SIGN & TYPE
- +7.0 — EXISTING ELEVATION
- 8.00 — PROPOSED ELEVATION
- STORMWATER FLOW DIRECTION
- SOIL BORING LOCATION
- GUARDRAIL
- X — X-SECTION LETTER (NUMBER)
- P-XX — PAGE WHERE SECTION IS FOUND

GENERAL NOTES:

1) All work shall be performed in accordance with the requirements, specifications and standards of the Miami-Dade Public Works Dept. and D.E.R.M.
2) These plans have been prepared with the best information available to the engineer. The Engineering Contractor MUST notify the "UNDERGROUND UTILITIES NOTIFICATION CENTER OF FLORIDA", Phone No. 1-800-432-4770, and the Florida Power & Light Co., 48 hours prior to start of excavation and / or construction. If any discrepancies are encountered to the extent that a "Field Revision" is required, Engineer MUST be notified immediately.
3) Deviations from the approved plan shall not be permitted by the Engineering Contractor without the written consent of the Engineer of Record, the MDCPWD and D.E.R.M.
4) All elevations refer to the National Geodetic Vertical Datum.
5) All existing structures and utilities shall be protected at all times during excavation and construction. Neither the Engineer nor the Owner / Developer shall be responsible for damages resulting from the Engineering Contractor's work. All existing pavement, utilities (above and below ground), or surface features disturbed during construction shall be restored to equal or better condition by the contractor in accordance with Miami-Dade County Public Works Standards and Specifications or as directed by the Engineer / Inspector.
6) Services connected with job safety are not part of this plan / contract.
7) Underground Contractor shall comply with the Trench Safety Act, HB 3183, Florida Statutes, which incorporates, but is not limited to, the following:
   1. OSHA Standard 29 C.F.R. Part 1926, Subpart P, Excavation and Trenches.
   2. Contract bids for trench excavations (in excess of 5 feet deep) shall include reference to the safety standards, written assurance of compliance, and a separate item identifying the cost of compliance.
   3. Adhere to any special shoring requirements of the state or other governmental subdivision.
8) All geometric layout to be performed in accordance with the approved final plat for this project.
9) Engineering contractor shall coordinate maintenance of traffic during construction with the Miami-Dade County Public Works Department and shall meet the requirements of the State of Florida "Manual on Traffic Control and Safe Practices for Street and Highway Construction".
10) All muck, peat, or and clay with high percentage of organic material and / or existing unsuitable fill material shall be removed to natural limerock or sand within the proposed Right-of-Way or proposed pavement area (if within private property). For detailed specifications see M.D.C.P.W.D. Specs. Section 30.
11) Pedestrian ramps shall be built as per Standard Detail R 13.3. Ramps shall be constructed providing slope toward drainage structure to avoid blockage of runoff flow.
12) All drainage pipes shall be High Density Polyethylene Pipe (HDPE). Invert elevations shall be set pursuant to Structure Table (Sheet P-04).
13) Calculations for drainage structures for this project include the Right-of-Way area (roadways) and 100% of parking and building area inside private property.
14) No runoff from private property shall be discharged into any adjacent property.
15) Areas adjacent to lakes shall be graded to prevent the direct overland discharge of storm water into canal.
16) If there is any work to be done within areas privately owned (not dedicated as public right of way), permit from owners of said areas shall be obtained prior to commencement of any work.
17) Asphalt pavement shall be constructed as follows:
    a) Asphaltic Concrete Surface Course, 1" thick.
    b) Limerock base Course, Primed, 8" thick.
    c) Stabilized Subgrade, 12" thick (min.)
18) Miami-Dade County Flood Criteria: 5.5 NGVD
19) Minimum Finish Floor Elevation: 7.60 NGVD

ENGINEER'S CERTIFICATION:

This plan was prepared under our direction and is true and correct and to the best of my knowledge and belief conforms to the requirements shown in the Manual of Uniform Minimum Standards for Design, Construction and Maintenance for Streets and Highways as adopted by the State of Florida Legislature, Chapter 72-328, Florida Statutes.

SHEET INDEX

P-01. - VICINITY MAP
P-02. - DRAINAGE PLAN (1)
P-03. - DRAINAGE PLAN (2)
P-04. - DRAINAGE STRUCTURE DETAILS
P-05. - GRADING PLAN (1)
P-06. - GRADING PLAN (2)
P-07. - TYPICAL SECTIONS & DETAILS
P-08. - SIGNS & PAVEMENT MARKINGS PLAN (1)
P-09. - SIGNS & PAVEMENT MARKINGS PLAN (2)

Call 48 hours before you dig

It's the Law! 1-800-432-4770

Sunshine State One Call of Florida, Inc.

MINIMUM FINISH FLOOR ELEVATION = +7.60 (N.G.V.D)

No.	Date	Apvd.	J.N.	F.B.	Revision Description

Professional Land Surveyor No.
Professional Engineer No.
State of Florida LB00761

SILVER PALM LAKE
PAVING, GRADING & DRAINAGE PLAN

E.R. BROWNELL & ASSOCIATES, INC.
CONSULTING ENGINEERS — LAND SURVEYORS
3152 Coral Way
Miami, Florida 33145
Phone: (305) 446-3511

Drawn by: AA	Ref.		Sheet P-01 of 9
Des. by: Za	J.N. 55465	F.B.	Sk. No. P-641
Chk. by: JN	Scale: AS SHOWN	Date: 12/13/02	

03/18/03 @ 13:42
P-01.dwg

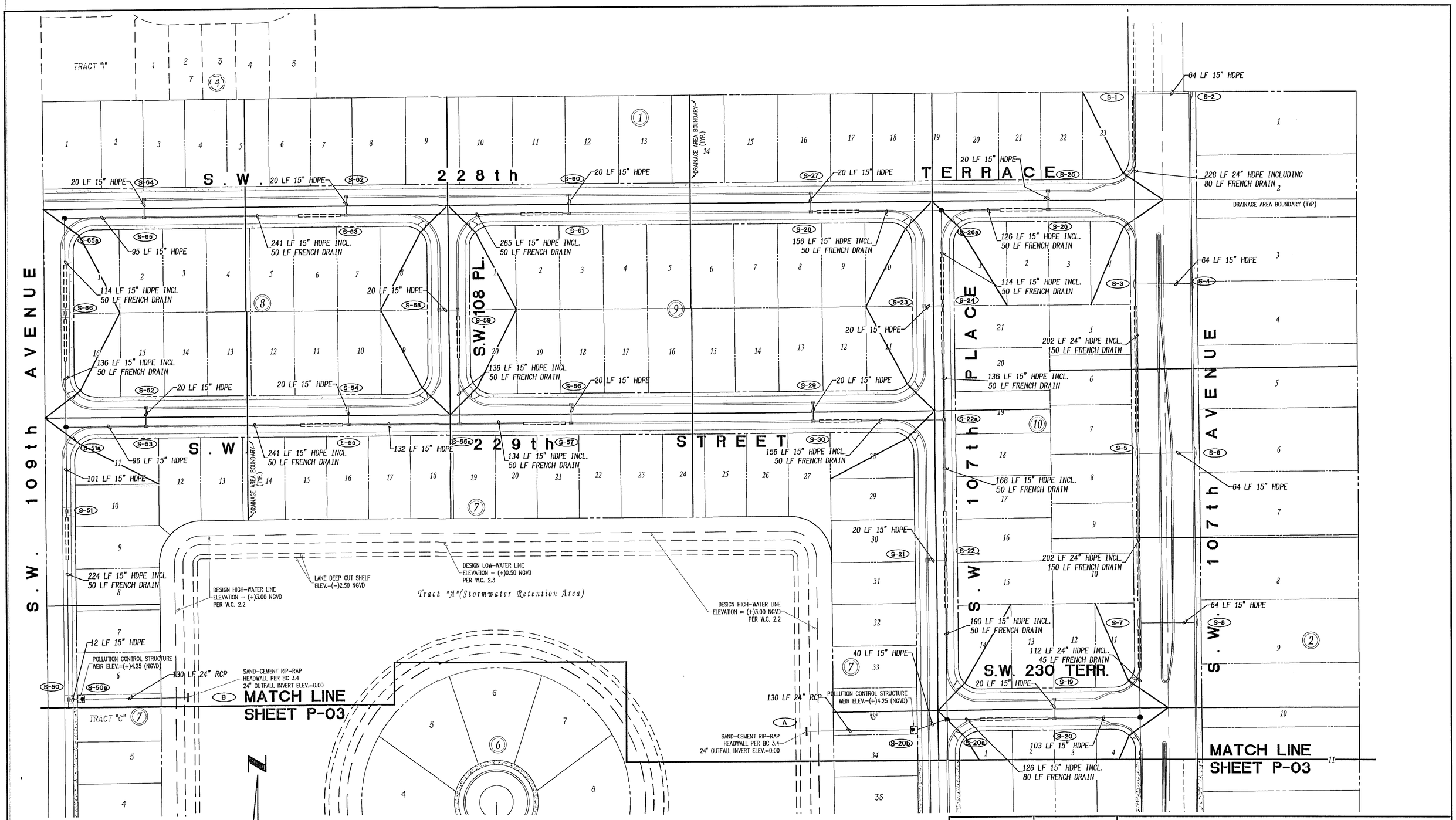

No.	Date	Apvd.	J.N.	F.B.	Revision Description

Professional Land Surveyor No.
Professional Engineer No.
State of Florida EB00761

SILVER PALM LAKE
DRAINAGE PLAN (1)

E.R. BROWNELL & ASSOCIATES, INC.
CONSULTING ENGINEERS — LAND SURVEYORS
3152 Coral Way — Miami, Florida, 33145 — Phone: (305) 446-3511

Drawn by: AA	Ref.		Sheet P-02 of
Des. by: 2A	J.N. 55465	F.B.	Sk. No. P-641
Chk. by: JN	Scale: 1" = 50'	Date: 03/13/03	

03/14/03 @ 11:46
P-02.dwg

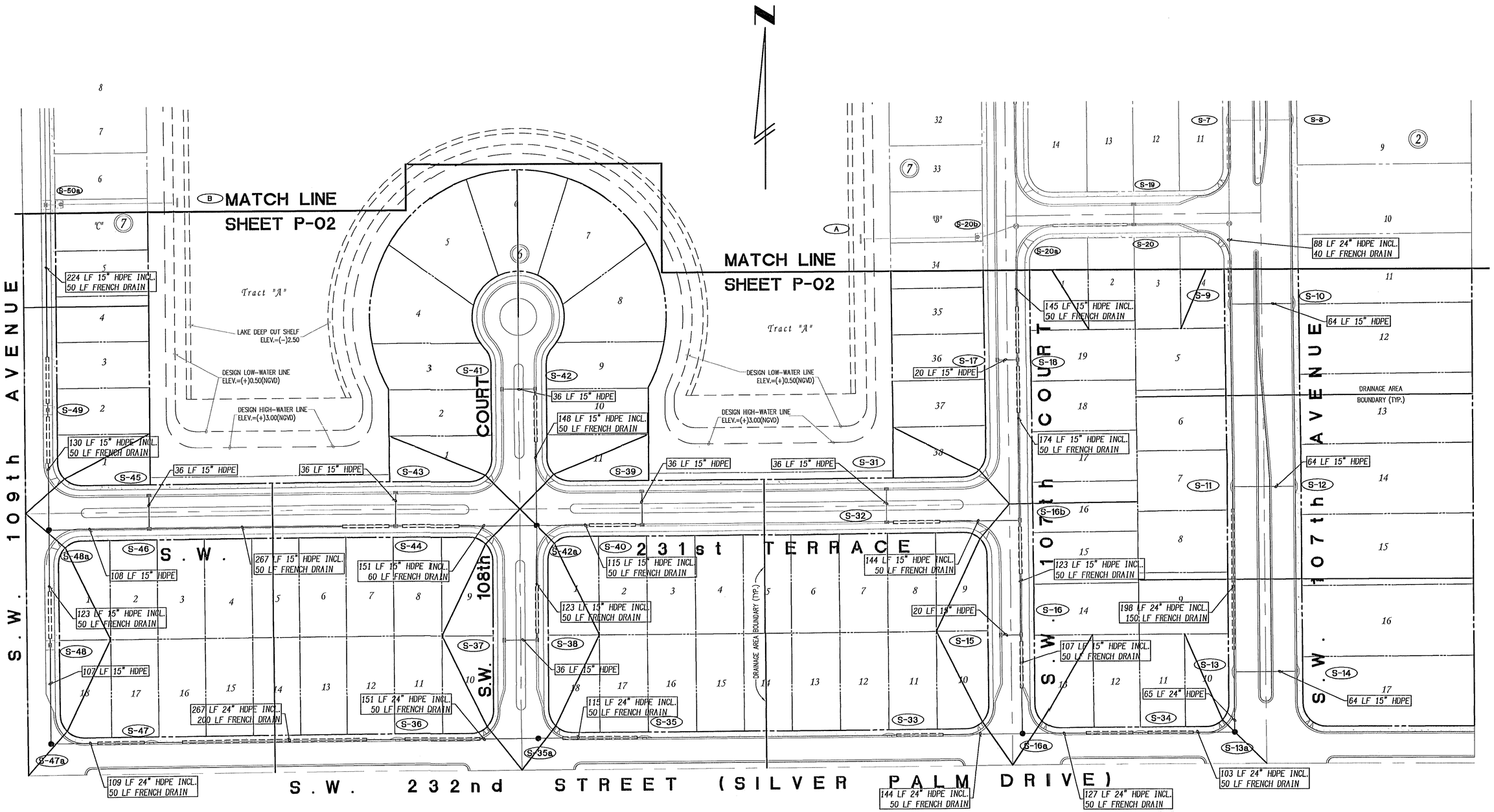

MINIMUM FINISH FLOOR ELEVATION = +7.60 (N.G.V.D)

Call 48 hours before you dig

It's the Law! 1-800-432-4770

Sunshine State One Call of Florida, Inc.

No.	Date	Apvd.	J.N.	F.B.	Revision Description

Professional Land Surveyor No.
Professional Engineer No.
State of Florida - EB00761

SILVER PALM LAKE
DRAINAGE PLAN (2)

E.R. BROWNELL & ASSOCIATES, INC.
CONSULTING ENGINEERS — LAND SURVEYORS
3152 Coral Way — Miami, Florida, 33145 — Phone: (305) 445-3511

Drawn by: AA	Ref.		Sheet P-03 of
Des. by: ZA	J.N. 55465	F.B.	Sk. No. P-641
Chk. by: JN	Scale: 1" = 50'	Date: 03/13/03	

03/17/03 @ 13:54
P-03.dwg

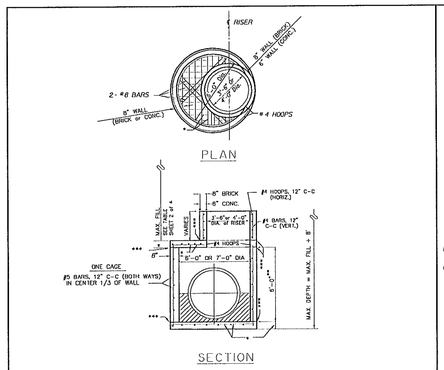

ALTERNATE 'A'

NOTES

1. FOR 6' DIA. BOX USE THE SAME SLAB REINFORCING, THICKNESS AND FILL HEIGHT, AS FOR A 8'-0" WIDTH BOX, ALTERNATE 'B' & 'C'.
2. FOR 7'DIA. BOX USE THE SAME SLAB REINFORCING, THICKNESS AND FILL HEIGHT, AS FOR A 8'-0" WIDTH BOX, ALTERNATE 'B' & 'C'.
3. FOR GENERAL NOTES SEE SHEET 4 of 4.

* SEE NOTES (SHEET 4 OF 4)
** UNLESS OTHERWISE SHOWN ON PLANS
*** CONSTRUCTION JOINT PERMITTED

ITEM	CROSS REF.	SPEC. REF.
INLET CONST		SEC 355
M.H. CONST.		SEC 340

METROPOLITAN DADE COUNTY PUBLIC WORKS DEPARTMENT	APPROVED 5/17/72	REVISED 3/1/81	STANDARD STORM DRAINAGE DETAIL INLET, MANHOLE AND JUNCTION BOX (TYPE J)	SD 2.6 SHEET 1 of 4

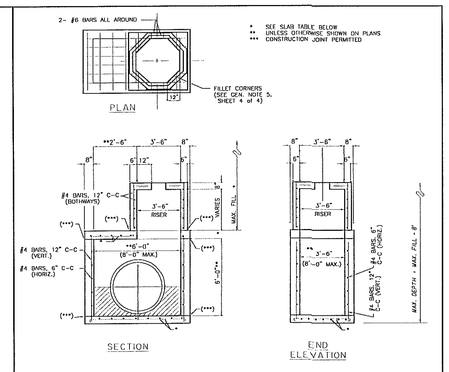

ALTERNATE 'B' & 'C'

* SEE SLAB TABLE BELOW
** UNLESS OTHERWISE SHOWN ON PLANS
*** CONSTRUCTION JOINT PERMITTED

TOP AND BOTTOM SLAB TABLE TYPE 'J'

TYPE J, ALT.'B'(N.S. CONC)					TYPE J, ALT.'C' 3000 P.S.I. CONC.				
OUT WALL THICKNESS	SLAB THICKNESS	ALTERNATE FILL HEIGHT OVER TOP SLAB	REINF. IN TOP & BOTTOM SLABS		SLAB THICKNESS	ALTERNATE FILL HEIGHT OVER TOP SLAB	REINF. IN TOP & BOTTOM SLABS		
3'-6"	8"	2' 10 20"	#6-9"C.-C. EW		8"	2' 10 20"	#6-6"C.-C.EW.		
3'-6"	8"	2' 10 16"	–		10"	2' 10 25"	#7-6"C.-C.EW.	INLET CONST.	SEC 355
3'-6"	10"	3' 10 16"	–		10"	3' 10 25"	#7-6"C.-C.EW.	M.H. CONST.	SEC 340
4'-0"	10"	3' 10 14"	–		10"	3' 10 20"	#7-6"C.-C.EW.		
4'-0"	12"	4' 10 14"	–		12"	4' 10 20"	#7-6"C.-C.EW.	ITEM	CROSS REF. / SPEC. REF.

METROPOLITAN DADE COUNTY PUBLIC WORKS DEPARTMENT	APPROVED 5/17/72	REVISED	STANDARD STORM DRAINAGE DETAIL INLET, MANHOLE AND JUNCTION BOX (TYPE J)	SD 2.6 SHEET 2 of 4

DRAINAGE STRUCTURE TABLE

INLET No.	INLET TYPE	INVERT ELEVATION NORTH	SOUTH	EAST	WEST	GRATE ELEV.	BOTTOM ELEV.	PIPE DIA.(ø)	SOLID PIPE (LF)	FR. DRAIN (LF)	BAFFLES (E,W,N,S)
2	P (P-5)	–	–	–	3.50	6.18	1.50	15"	64	–	–
1	P (P-5)	–	2.18	3.50	–	6.18	-1.32	24"	148	80	S
4	P (P-6)	–	–	–	3.50	6.28	1.50	15"	64	–	–
3	J (P-6)	2.18	2.18	3.50	–	6.28	-1.32	24"	52	150	N, S
6	P (P-6)	–	–	–	3.50	6.28	1.50	15"	64	–	–
5	J (P-6)	2.18	2.18	3.50	–	6.28	-1.32	24"	52	150	N, S
8	P (P-6)	–	–	–	3.50	6.28	1.50	15"	64	–	–
7	J (P-6)	2.18	2.18	3.50	–	6.28	-1.32	24"	67	45	N, S
7a	J (MH)	2.18	2.18	–	3.00	6.82	-1.32	15"	103	–	N, S
10	P (P-6)	–	–	–	3.50	6.28	1.50	15"	64	–	–
9	P (P-6)	2.18	–	3.50	–	6.28	-1.32	24"	48	40	N
19	P (VG)	–	3.00	–	–	6.49	1.00	15"	20	–	–
20	P (VG)	3.00	–	3.00	3.00	6.49	-0.50	15"	46	80	W
12	P (P-6)	–	–	–	3.50	6.28	1.50	15"	64	–	–
11	P (P-6)	–	2.18	3.50	–	6.28	-1.32	24"	48	150	S
14	P (P-6)	–	–	–	3.50	6.28	1.50	15"	64	–	–
13	P (P-6)	2.18	2.18	3.50	–	6.28	-1.32	24"	65	–	N
13a	P (MH)	2.18	–	–	2.18	6.47	-1.32	24"	53	50	W
34	J (P-6)	–	–	2.13	2.13	6.13	-1.37	24"	77	50	E, W
33	P (P-6)	–	–	2.18	–	6.18	-1.32	24"	94	50	E
16a	J (MH)	3.00	–	2.13	2.18	6.85	-1.37	15"	57	50	N, E, W
15	P (VG)	–	–	3.00	–	6.54	1.00	15"	20	–	–
16	J (VG)	3.00	3.00	–	3.00	6.54	-0.50	15"	73	50	N, S
31	P (VG)	–	3.00	–	–	6.49	1.00	15"	36	–	–
32	P (VG)	3.00	–	3.00	–	6.49	-0.50	15"	94	50	E
16b	J (VG)	3.00	3.00	–	3.00	6.89	-0.50	15"	124	50	N, S, W
17	P (VG)	–	–	3.00	–	6.44	1.00	15"	20	–	–
18	J (VG)	3.00	3.00	–	3.00	6.44	-0.50	15"	95	50	N, S
25	P (VG)	–	3.00	–	–	6.49	1.00	15"	20	–	–
26	P (VG)	3.00	–	–	3.00	6.49	-0.50	15"	76	50	W
27	P (VG)	–	3.00	–	–	6.49	1.00	15"	20	–	–
28	P (VG)	3.00	–	3.00	–	6.49	-0.50	15"	106	50	E
26a	J (MH)	–	3.00	3.00	3.00	6.86	-0.50	15"	64	50	E, W, S
23	P (VG)	–	–	3.00	–	6.49	1.00	15"	20	–	–
24	J (VG)	3.00	3.00	–	3.00	6.49	-0.50	15"	86	50	N, S
29	P (VG)	–	3.00	–	–	6.54	1.00	15"	20	–	–
30	P (VG)	3.00	–	3.00	–	6.54	-0.50	15"	106	50	E
22a	J (VG)	3.00	3.00	–	3.00	6.91	-0.50	15"	118	50	N, S, W
21	P (VG)	–	–	3.00	–	6.39	1.00	15"	20	–	–
22	J (VG)	3.00	3.00	–	3.00	6.39	-0.50	15"	140	50	N, S
20a	J (MH)	3.00	3.00	3.00	3.00	6.90	-0.50	15"	40	–	N, S, E
20b	PCS	–	–	3.00	1.50	7.25	-0.50	24"	130	–	E
A	ENDWALL	–	–	0.00	–	–	–	24"	–	–	–

TO OUTFALL "A"

DRAINAGE STRUCTURE TABLE

INLET No.	INLET TYPE	INVERT ELEVATION NORTH	SOUTH	EAST	WEST	GRATE ELEV.	BOTTOM ELEV.	PIPE DIA.(ø)	SOLID PIPE (LF)	FR. DRAIN (LF)	BAFFLES (E,W,N,S)
60	P (VG)	–	3.00	–	–	6.49	1.00	15"	20	–	–
61	P (VG)	3.00	–	–	3.00	6.49	-0.50	15"	215	50	W
62	P (VG)	–	3.00	–	–	6.54	1.00	15"	20	–	–
63	J (VG)	3.00	–	3.00	3.00	6.54	-0.50	15"	191	50	E, W
64	P (VG)	–	3.00	–	–	6.54	1.00	15"	20	–	–
65	P (VG)	3.00	–	3.00	3.00	6.54	-0.50	15"	95	–	E
65a	P (MH)	–	3.00	3.00	–	6.88	-0.50	15"	64	50	S
66	J (Swale)	3.00	3.00	–	–	6.25	-0.50	15"	86	50	N, S
58	P (VG)	–	–	3.00	–	6.54	1.00	15"	20	–	–
59	P (VG)	–	3.00	–	3.00	6.54	-0.50	15"	86	50	S
56	P (VG)	–	3.00	–	–	6.54	1.00	15"	20	–	–
57	P (VG)	3.00	–	–	3.00	6.54	-0.50	15"	84	50	W
55a	J (VG)	3.00	–	3.00	3.00	6.91	-0.50	15"	132	–	N, E
54	P (VG)	–	3.00	–	–	6.54	1.00	15"	20	–	–
55	P (VG)	3.00	–	3.00	3.00	6.54	-0.50	15"	191	50	W
52	P (VG)	–	3.00	–	–	6.54	1.00	15"	20	–	–
53	P (VG)	3.00	–	3.00	3.00	6.54	-0.50	15"	96	–	E
51a	P (MH)	3.00	3.00	3.00	–	6.88	-0.50	15"	101	–	N
51	P (VG)	3.00	3.00	–	–	6.30	-0.50	15"	174	50	S
35	P (P-6)	–	–	–	2.18	6.18	-1.32	24"	35	80	W
35a	J (MH)	–	–	2.18	2.18	6.85	-1.32	24"	71	80	E, W
36	J (P-6)	–	–	2.18	2.18	6.18	-1.32	24"	67	200	E, W
47	J (P-6)	–	–	2.18	2.18	6.18	-1.32	24"	59	50	E, W
47a	P (MH)	3.00	–	2.18	–	6.88	-1.32	15"	107	–	E
48	P (Swale)	3.00	3.00	–	–	6.20	-0.50	15"	73	50	N
37	P (VG)	–	–	3.00	–	6.49	1.00	15"	36	–	–
38	P (VG)	3.00	–	–	3.00	6.49	-0.50	15"	73	50	N
39	P (VG)	–	3.00	–	–	6.49	1.00	15"	36	–	–
40	P (VG)	3.00	–	–	3.00	6.49	-0.50	15"	65	50	W
41	P (VG)	–	–	3.00	–	6.49	1.00	15"	36	–	–
42	P (VG)	–	3.00	–	3.00	6.49	-0.50	15"	98	50	S
42a	J (MH)	3.00	3.00	3.00	3.00	6.88	-0.50	15"	91	60	E, W, N, S
43	P (VG)	–	3.00	–	–	6.49	1.00	15"	36	–	–
44	J (VG)	3.00	–	3.00	3.00	6.49	-0.50	15"	217	50	E, W
45	P (VG)	–	3.00	–	–	6.49	1.00	15"	36	–	–
46	P (VG)	3.00	–	3.00	3.00	6.49	-0.50	15"	108	–	E
48a	J (MH)	3.00	3.00	3.00	–	6.88	-0.50	15"	80	50	N, S
49	J (Swale)	3.00	3.00	–	–	6.30	-0.50	15"	174	50	N, S
50	J (Swale)	3.00	3.00	3.00	–	6.30	-0.50	15"	12	–	N, S
50a	PCS	–	–	3.00	1.50	6.90	-0.50	24"	130	–	W
B	ENDWALL	–	–	–	0.00	–	–	24"	–	–	–

TO OUTFALL "B"

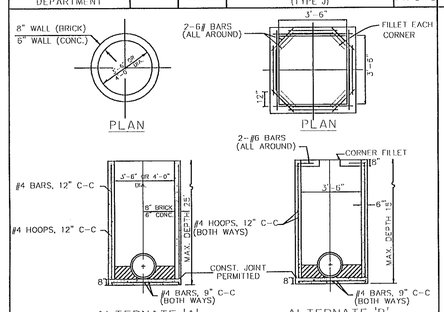

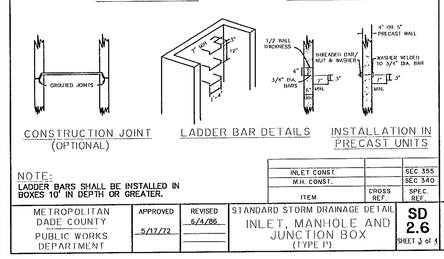

NOTE:
LADDER BARS SHALL BE INSTALLED IN BOXES 10' IN DEPTH OR GREATER.

ITEM	CROSS REF.	SPEC. REF.
INLET CONST		SEC 355
M.H. CONST.		SEC 340

METROPOLITAN DADE COUNTY PUBLIC WORKS DEPARTMENT	APPROVED 5/17/72	REVISED 6/4/86	STANDARD STORM DRAINAGE DETAIL INLET, MANHOLE AND JUNCTION BOX (TYPE P)	SD 2.6 SHEET 3 of 4

GENERAL NOTES:

1. CIRCULAR STRUCTURES (Alternates 'A') MAY BE CONSTRUCTED OF CONCRETE OR BRICK, BUT RECTANGULAR STRUCTURES (Alternates 'B' & 'C') SHALL BE CONSTRUCTED OF CONCRETE ONLY. THE CONCRETE MAY BE CAST-IN-PLACE OR PRECAST.
2. WALL REINFORCEMENT AND THICKNESS ARE FOR EITHER CAST-IN-PLACE OR PRECAST CONCRETE EXCEPT THAT FOR PRECAST CIRCULAR UNITS ASTM Specification C-76, Table III, FOR B WALL REINFORCED CONCRETE PIPE OR PRECAST CIRCULAR UNITS IN ACCORDANCE WITH ASTM Specification C-478 WILL BE ACCEPTABLE. TOP AND FLOOR SLAB THICKNESS AND REINFORCEMENT ARE FOR ALL TYPES OF CONSTRUCTION.
3. PRECAST TOP AND/OR FLOOR SLABS MAY BE OF THE SAME CONCRETE AS SPECIFIED IN ASTM Specifications C-478 FOR PRECAST CIRCULAR UNITS.
4. SMOOTH FLOW CHANNELS COMPOSED OF CONCRETE, OR BRICK AND MORTAR, SHALL BE CONSTRUCTED IN THE BOTTOMS OF ALL STRUCTURES TO A DEPTH EQUAL TO HALF THE DIAMETER OF THE LARGEST PIPE.
5. CORNER FILLETS SHOWN FOR RECTANGULAR STRUCTURES ARE NECESSARY ONLY WHEN STRUCTURES ARE USED IN CONJUNCTION WITH CIRCULAR TOPS.
6. STRUCTURES SHALL BE SECURED TO INLET THROATS, RISERS OR MANHOLE TOPS WITH A MINIMUM OF 8-No. 4 BARS 12" LONG, OR AS SHOWN ON SHEET 2.
7. ANY INLET, MANHOLE OR JUNCTION BOX MAY BE USED IN CONJUNCTION WITH ANY INLET THROAT OR MANHOLE TOP.
8. MORTAR USED TO SEAL THE PIPE IN THE WALLS TO THE PRECAST UNITS SHALL BE OF SUCH A MIX THAT SHRINKAGE WILL NOT CAUSE LEAKAGE INTO OR OUT OF THE UNITS. MAXIMUM OPENING FOR PIPE SHALL BE MAX. REQUIRED O.D. + 6".
9. BRICK MASONRY CONSTRUCTION SHALL BE PLASTERED WITH 1/2" THICK MORTAR INSIDE AND OUTSIDE.
10. CONCRETE PROTECTION FOR REINFORCEMENT IN CAST-IN-PLACE OR PRECAST CONCRETE SHALL BE IN ACCORDANCE WITH CHAPTER 7, "BUILDING CODE REQUIREMENTS FOR REINFORCED CONCRETE (ACI 318-71)"

ITEM	CROSS REF.	SPEC. REF.
INLET CONST		SEC 355
M.H. CONST.		SEC 340

METROPOLITAN DADE COUNTY PUBLIC WORKS DEPARTMENT	APPROVED 5/17/72	REVISED 3/8/81 6/4/86	STANDARD STORM DRAINAGE DETAIL INLET, MANHOLE AND JUNCTION BOX (TYPE S P & J)	SD 2.6 SHEET 4 of 4

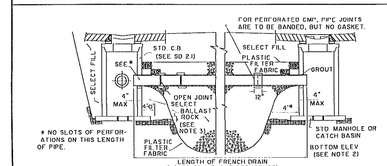

NOTES:

1. PLASTIC FILTER FABRIC (AT EA. SIDE, TOP AND BOTTOM) SHALL BE USED IN SANDY AREAS AS NOTED ON PLANS AND/OR AS DIRECTED BY THE ENGINEER
2. THE BOTTOM OF THE EXFILTRATION TRENCH SHALL BE 15'-0" BELOW EXISTING GROUND ELEVATION, UNLESS FIELD CONDITIONS WARRANT OTHERWISE
3. AFTER THE BALLAST ROCK HAS BEEN PLACED TO THE PROPER ELEVATION, IT SHALL BE CAREFULLY WASHED DOWN WITH CLEAN WATER IN ORDER TO ALLOW FOR INITIAL SETTLEMENT THAT MAY OCCUR. IF IT DOES TAKE PLACE, ADDITIONAL BALLAST ROCK WILL BE ADDED TO RESTORE THE BALLAST ROCK TO THE PROPER ELEVATION, SO THAT THE EXFILTRATION TRENCH WILL BE COMPLETED IN ACCORDANCE WITH THE DETAILS
4. INVERT ELEVATION TO BE AS SHOWN IN W.C. 2.21AVG. OCTOBER GROUND WATER LEVEL).
5. SEE SHEET 2 OF 3 OF SD 1.1 IN THE D.C.P.W. MANUAL.

DRAINAGE PIPE		SEC 320
EXFILTRATION TRENCH		SEC 360
DESIGN WATER TABLE	SEC.04	SEC.04
BALLAST ROCK		SEC.360
PVMT RESTORATION	R-211	
ITEM	CROSS REF.	SPEC. REF.

NOTE: IF THIS DETAIL IS TO BE USED FOR PRETREATMENT OF STORMWATER RUN-OFF, THE INVERT OF PIPE TO BE AS SHOWN IN W.C. 2.2; IF PRETREATMENT HAS BEEN PROVIDED THRU OTHER MEANS THE INVERT OF PIPE CAN BE LOWER THAN SHOWN IN W.C. 2.2.

STANDARD STORM DRAINAGE DETAIL EXFILTRATION TRENCH	SD 1.1

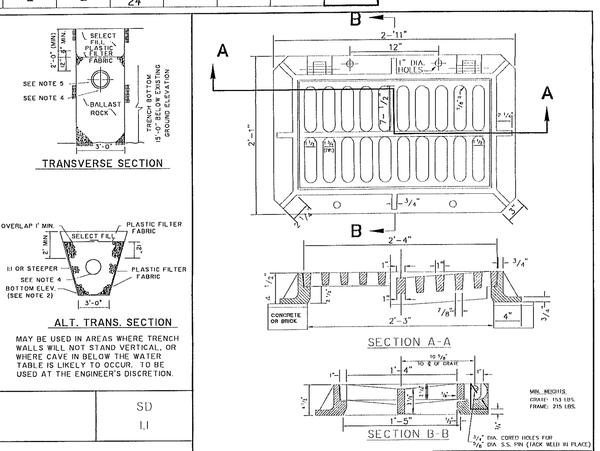

MAY BE USED IN AREAS WHERE TRENCH WALLS WILL NOT STAND VERTICAL, OR WHERE CAVE IN BELOW THE WATER TABLE IS LIKELY TO OCCUR. TO BE USED AT THE ENGINEER'S DISCRETION.

S.S.-STAINLESS STEEL

ITEM	CROSS REF.	SPEC. REF.
INLET CONST		SEC 355
SWALE INLET	SD-3.1	

METROPOLITAN DADE COUNTY PUBLIC WORKS DEPARTMENT	APPROVED 6/26/81	REVISED 5/2/82 8/10/86 2/9/99	STANDARD STORM DRAINAGE DETAIL CATCH BASIN FRAME AND HINGED GRATE	SD 2.3 SHEET 1 of 2

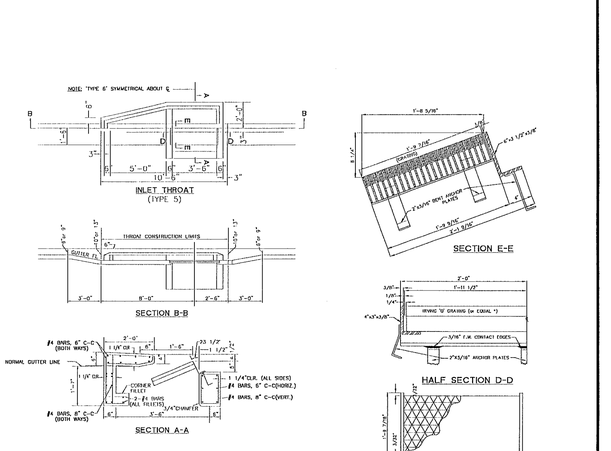

CURB INLET THROAT (TYPE 5 & 6)

(SD 3.4 SHEET 1 OF 2) N.T.S.

FRAME AND GRATE (IRVING TYPE 'Q' GRATING)

(SD 3.4 SHEET 2 OF 2) N.T.S.

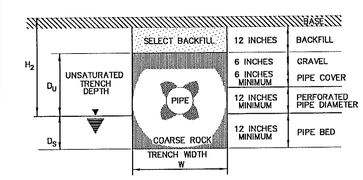

$$L = \frac{V}{K(H_2W+2H_2D_U-D_U^2+2H_2D_S)+(1.39\times10^{-4})WD_U}$$

L= LENGTH OF TRENCH REQUIRED (FEET)
V= VOLUME TREATED (ACRE-INCHES)
W= TRENCH WIDTH (FEET)
K= HYDRAULIC CONDUCTIVITY (CFS/FT.^{2}-FT.HEAD)
H_2= DEPTH TO WATER TABLE
D_U= NON-SATURATED TRENCH DEPTH
D_S= SATURATED TRENCH DEPTH

TYPICAL EXFILTRATION TRENCH

NOT TO SCALE

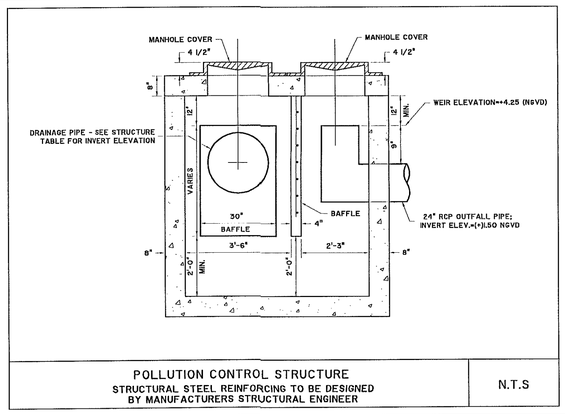

POLLUTION CONTROL STRUCTURE
STRUCTURAL STEEL REINFORCING TO BE DESIGNED BY MANUFACTURERS STRUCTURAL ENGINEER

N.T.S

Call 48 hours before you dig

It's the Law! 1-800-432-4770

Sunshine State One Call of Florida, Inc.

No.	Date	Apvd.	J.N.	F.B.	Revision Description

SILVER PALM LAKE
DRAINAGE STRUCTURE DETAILS

E.R. BROWNELL & ASSOCIATES, INC.
CONSULTING ENGINEERS — LAND SURVEYORS
3152 Coral Way — Miami, Florida, 33145 — Phone: (305) 446 3511

Professional Land Surveyor No.	Drawn by: AA	Ref.	Sheet P-04 of
Professional Engineer No.	Des. by: 2A	J.N. 55465	F.B.	Sk. No. P-641
State of Florida EB00761	Clk. by: JN	Scale: AS SHOWN	Date: 03/13/03

03/13/03 @ 17:52
P-04.dwg

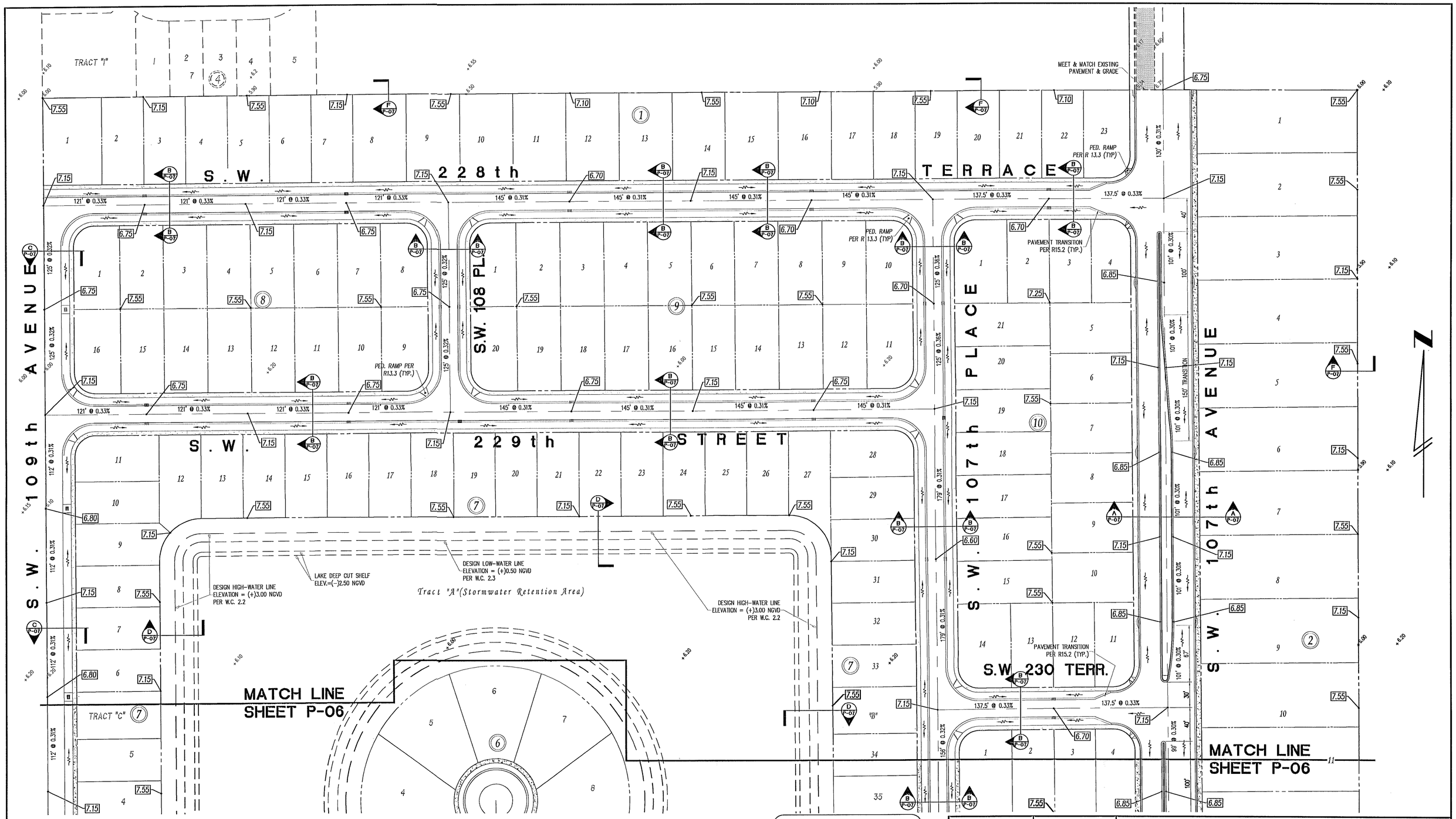

No.	Date	Apvd.	J.N.	F.B.	Revision Description

Professional Land Surveyor No.
Professional Engineer No.
State of Florida

Drawn by: AA	Ref.	
Des. by: 2A	J.N. 55465	F.B.
Chk. by: JN	Scale: 1" = 50'	Date: 03/13/03

SILVER PALM LAKE
GRADING PLAN (1)

E.R. BROWNELL & ASSOCIATES, INC.
CONSULTING ENGINEERS — LAND SURVEYORS
3152 Coral Way
Miami, Florida, 33145
Phone: (305) 446-3511

Sheet P-05 of 9
Sk. No. P-641

03/18/03 @ 09:23
P-06.dgn

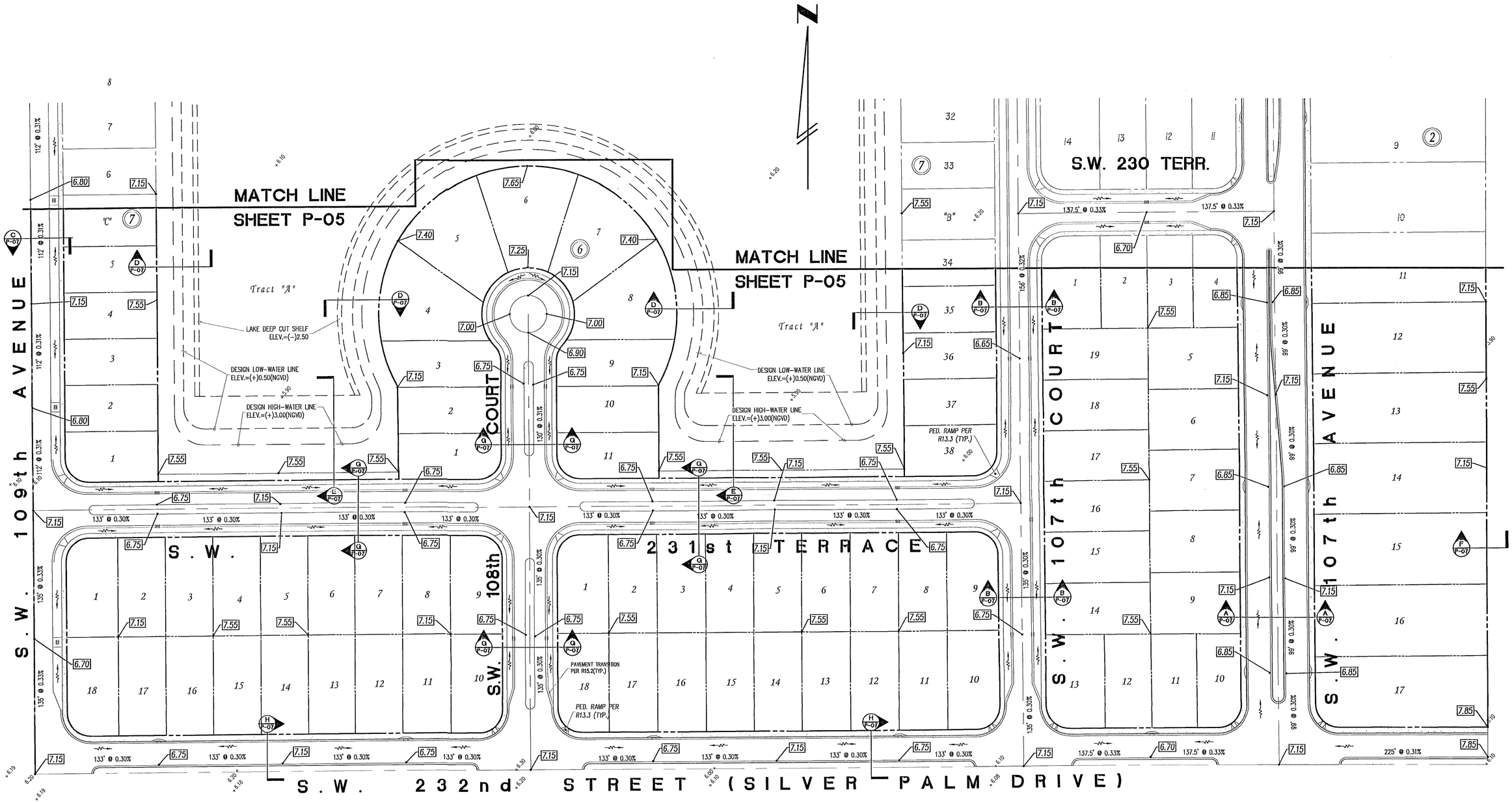

MINIMUM FINISH FLOOR
ELEVATION = +7.60 (N.G.V.D)

Call 48 hours before you dig

It's the Law!
1-800-432-4770

Sunshine State One Call of Florida, Inc.

No.	Date	Apvd.	J.N.	F.B.	Revision Description

Professional Land Surveyor No.
Professional Engineer No.
State of Florida

SILVER PALM LAKE
GRADING PLAN (2)

E.R. BROWNELL & ASSOCIATES, INC.
CONSULTING ENGINEERS — LAND SURVEYORS
3152 Coral Way — Miami, Florida, 33145 — Phone: (305) 446-3511

Drawn by: AA	Ref.		Sheet P-06 of 9
Des. by: ZA	J.N. 55465	F.B.	Sk. No. P-641
Chk. by: JN	Scale: 1" = 50'	Date: 03/13/03	

03/18/03 @ 09:49
P-06.dwg

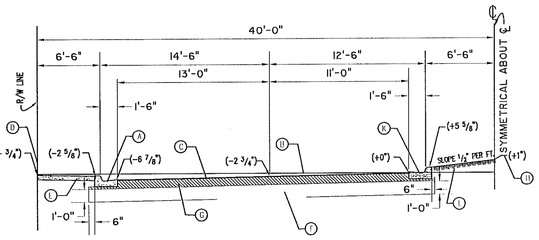

(A) 6" CURB AND GUTTER
(B) LEVEL LINE
(C) ASPHALTIC CONCRETE SURFACE COURSE 2" THICK (MINIMUM) TO BE PLACE IN TWO (2) LIFTS
(D) RIGHT-OF-WAY LINE AT OR ABOVE FLOOD CRITERIA
(E) CONCRETE SIDEWALK WHERE REQUIRED
(F) STABILIZED SUBGRADE
(G) BASE COURSE, PRIMED ENTIRE WIDTH
(H) OFFSET FROM LEVEL LINE
(K) TYPE 'F' MEDIAN CURB
(L) MEDIAN (SOLID SOD)

SECTION A-A
N.T.S.

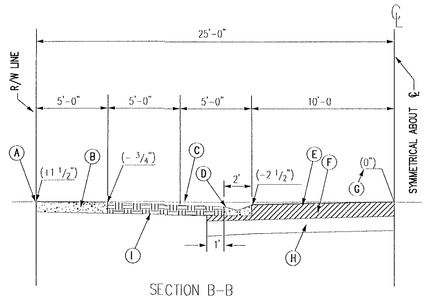

SECTION B-B
(N.T.S.)

(A) RIGHT OF WAY LINE AT OR ABOVE FLOOD CRITERIA
(B) 4" THICK CONCRETE SIDEWALK, 6" THICK AT DRIVEWAY ENTRANCES
(C) LEVEL LINE
(D) 2' CONCRETE VALLEY GUTTER
(E) ASPHALTIC CONCRETE SURFACE COURSE 1" THICK
(F) BASE COURSE, PRIMED ENTIRE WIDTH
(G) OFFSET FROM LEVEL LINE
(H) STABILIZED SUBGRADE
(I) SWALE, SOLID SOD

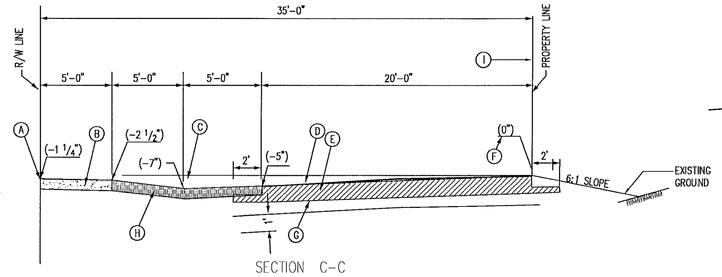

SECTION C-C
(N.T.S.)

(A) RIGHT OF WAY LINE AT OR ABOVE FLOOD CRITERIA
(B) 4" THICK CONCRETE SIDEWALK, 6" THICK AT DRIVEWAY ENTRANCES
(C) LEVEL LINE
(D) ASPHALTIC CONCRETE SURFACE COURSE 1" THICK
(E) BASE COURSE, PRIMED ENTIRE WIDTH
(F) OFFSET FROM LEVEL LINE
(G) STABILIZED SUBGRADE
(H) SWALE, SOLID SOD
(I) PROPERTY LINE

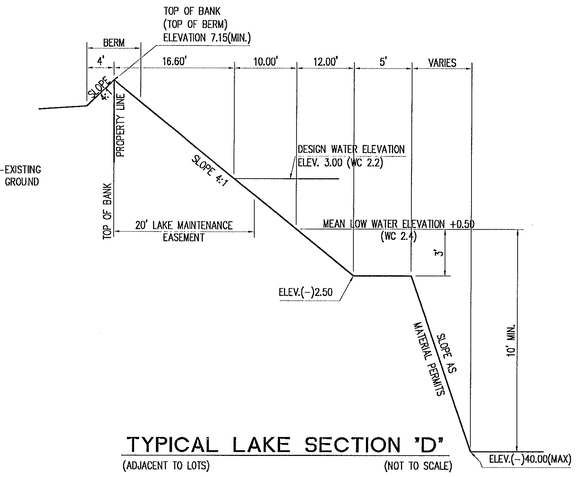

TYPICAL LAKE SECTION 'D'
(ADJACENT TO LOTS) (NOT TO SCALE)

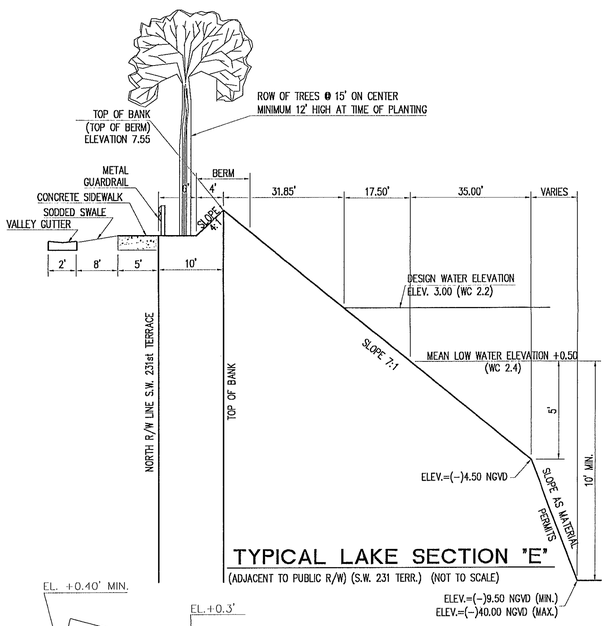

TYPICAL LAKE SECTION 'E'
(ADJACENT TO PUBLIC R/W) (S.W. 231 TERR.) (NOT TO SCALE)

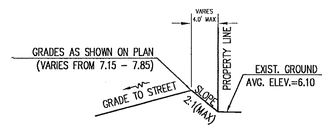

REAR LOT GRADING
(N.T.S.)

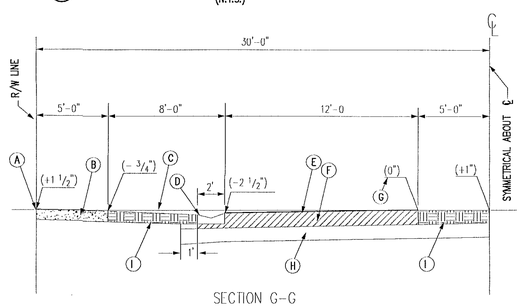

SECTION G-G
(N.T.S.)

(A) RIGHT OF WAY LINE AT OR ABOVE FLOOD CRITERIA
(B) 4" THICK CONCRETE SIDEWALK, 6" THICK AT DRIVEWAY ENTRANCES
(C) LEVEL LINE
(D) 2' CONCRETE VALLEY GUTTER
(E) ASPHALTIC CONCRETE SURFACE COURSE 1" THICK
(F) BASE COURSE, PRIMED ENTIRE WIDTH
(G) OFFSET FROM LEVEL LINE
(H) STABILIZED SUBGRADE
(I) SWALE, SOLID SOD

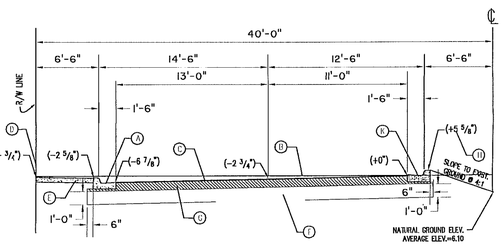

(A) 6" CURB AND GUTTER
(B) LEVEL LINE
(C) ASPHALTIC CONCRETE SURFACE COURSE 2" THICK (MINIMUM) TO BE PLACE IN TWO (2) LIFTS
(D) RIGHT-OF-WAY LINE AT OR ABOVE FLOOD CRITERIA
(E) CONCRETE SIDEWALK WHERE REQUIRED
(F) STABILIZED SUBGRADE
(G) BASE COURSE, PRIMED ENTIRE WIDTH
(H) OFFSET FROM LEVEL LINE
(K) TYPE 'F' MEDIAN CURB

SECTION H-H
N.T.S.

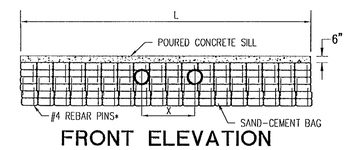

FRONT ELEVATION

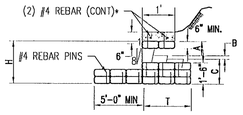

TYPICAL SECTION STRAIGHT END PIPE

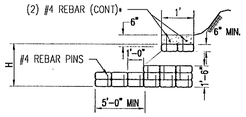

TYPICAL SECTION BEVEL END PIPE

	TABLE OF DIMENSIONS											
	PIPE SIZE	H	T	A	B	C	X	L ONE PIPE	L TWO PIPE	L THREE PIPE*	L FOUR PIPE
STRAIGHT END & BEVEL END	24"	4'-5"	2'-0"	2'-0"	2'-5"	0'-0"	3'-5"	9'-8"	13'-1"	16'-6"	19'-11"
	30"	5'-0"	2'-0"	2'-0"	3'-0"	0'-0"	4'-3"	11'-3"	15'-6"	19'-9"	24'-0"
	36"	5'-7"	2'-0"	2'-0"	3'-7"	0'-0"	5'-1"	12'-11"	18'-0"	23'-1"	28'-2"
	42"	6'-3"	3'-0"	2'-0"	2'-0"	2'-3"	6'-0"	14'-7"	20'-7"	26'-7"	32'-7"
	48"	6'-10"	3'-0"	2'-0"	2'-0"	2'-10"	6'-9"	16'-3"	23'-0"	29'-9"	36'-6"
BEVEL END ONLY	54"	7'-6"					7'-8"	18'-0"	25'-8"	33'-4"	41'-0"
	60"	8'-2"					8'-6"	19'-9"	28'-3"	36'-9"	45'-3"
	66"	8'-7"						21'-7"			
	72"	9'-3"						22'-6"			
	84"	10'-7"						24'-6"			
	96"	11'-11"						26'-6"			
	108"	13'-3"						28'-6"			
	120"	14'-7"						30'-6"			
	132"	15'-11"						32'-6"			
	144"	17'-3"						34'-6"			

*EXTEND THRU 3 BAGS

MIX RATIO
3: PARTS SAND
1: PART CEMENT

NOTE: BEVEL SLOPE SHALL NOT BE GREATER THAN 1:1 FOR SINGLE TIER CONSTRUCTION. WHEN THE PIPE BEVEL IS GREATER THAN 1:1, HEADWALLS SHALL BE CONSTRUCTED AS REQUIRED FOR STRAIGHT END PIPES.

STRAIGHT SAND-CEMENT RIP RAP HEADWALL
(N.T.S.)

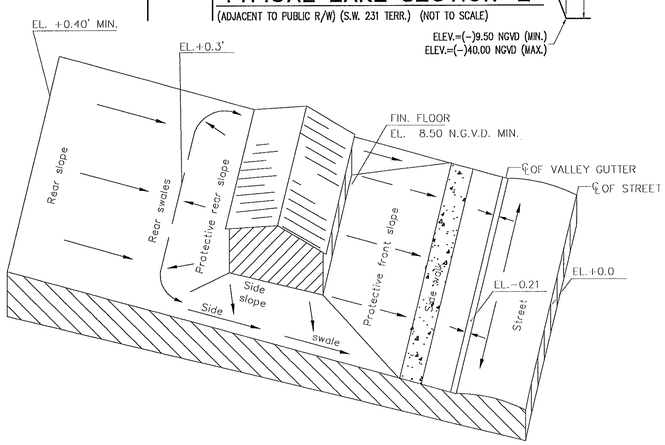

TYPICAL LOT GRADING
(ALL DRAINAGE TO STREET) N.T.S.

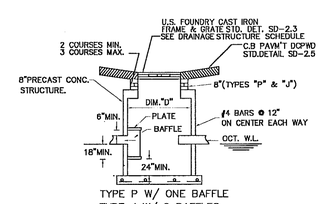

TYPE P W/ ONE BAFFLE
TYPE J W/ 2 BAFFLES

NOTE: BAFFLES AS REQUIRED BY DADE COUNTY D.E.R.M.

CATCH BASIN DETAIL
N.T.S.

DIMENSION "D"	
INLET TYPE	DIMENSION
"P"	42" x 42"
"J"	54" x 54"

Call 48 hours before you dig

It's the Law!
1-800-432-4770

Sunshine State One Call of Florida, Inc.

No.	Date	Apvd.	J.N.	F.B.	Revision Description

Professional Land Surveyor No.
Professional Engineer No.
State of Florida

SILVER PALM LAKE
TYPICAL SECTIONS & DETAILS

E.R. BROWNELL & ASSOCIATES, INC.
CONSULTING ENGINEERS LAND SURVEYORS
3152 Coral Way
Miami, Florida, 33145
Phone: (305) 446-3511

Drawn by: AA	Ref.		Sheet P-07 of 9
Des. by: 2A	J.N. 55465	F.B.	Sk. No. P-641
Chk. by: JN	Scale: AS SHOWN	Date: 03/13/03	

05/18/05 @ 11:33
1' 01.dwg

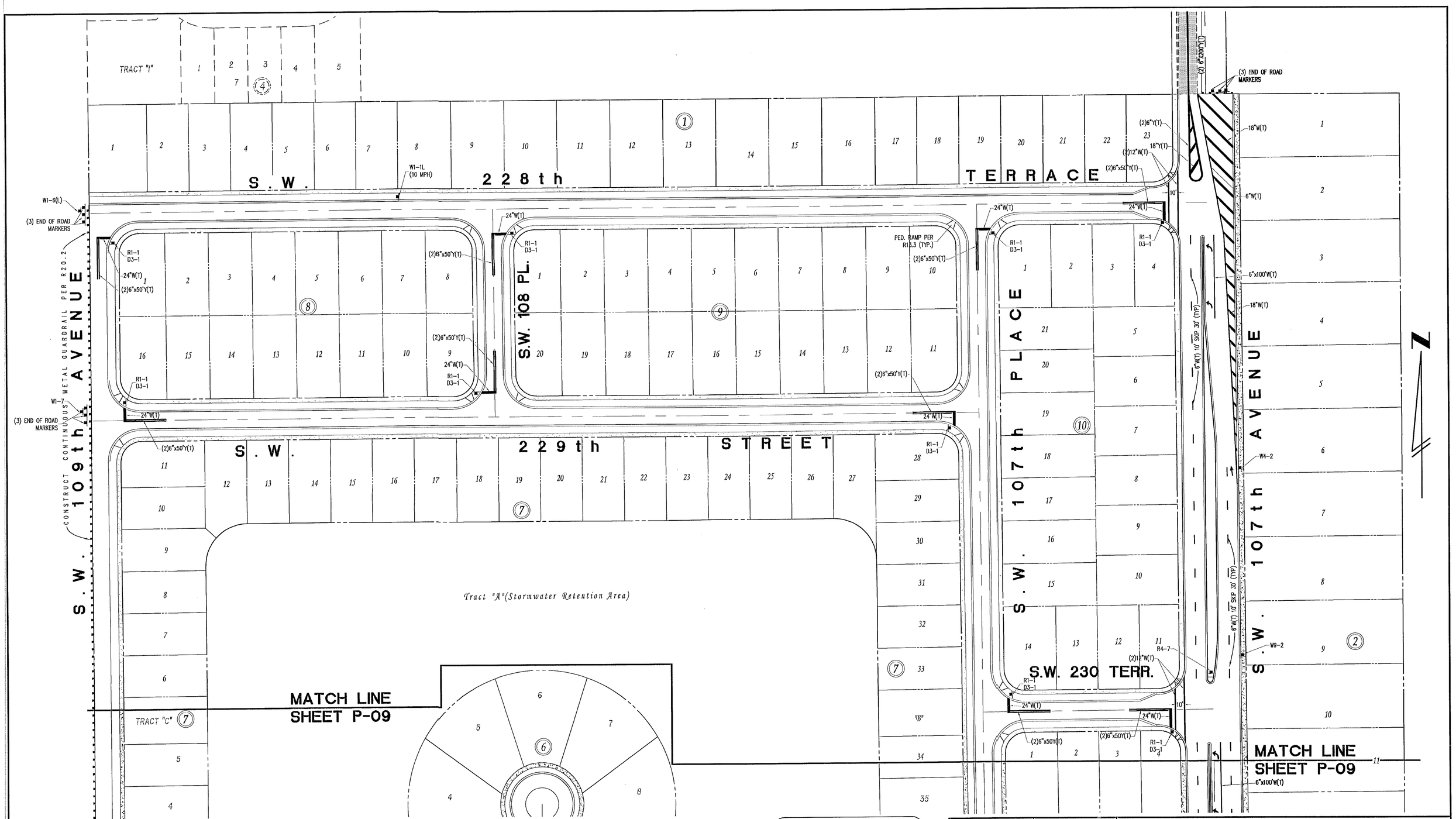

Call 48 hours before you dig

It's the Law! 1-800-432-4770

Sunshine State One Call of Florida, Inc.

No.	Date	Apvd.	J.N.	F.B.	Revision Description

Professional Land Surveyor No.
Professional Engineer No.
State of Florida EB000701

SILVER PALM LAKE

SIGNS & PAVEMENT MARKING PLAN (1)

E.R. BROWNELL & ASSOCIATES, INC.
CONSULTING ENGINEERS — LAND SURVEYORS
3152 Coral Way — Miami, Florida, 33145 — Phone: (305) 446-3511

Drawn by: AA	Ref.		Sheet P-08 of 9
Des. by: 2A	J.N. 55465	F.B.	Sk. No. P-641
Chk. by: JN	Scale: 1" = 50'	Date: 03/13/03	

03/18/03 @ 12:43
P-08.dwg

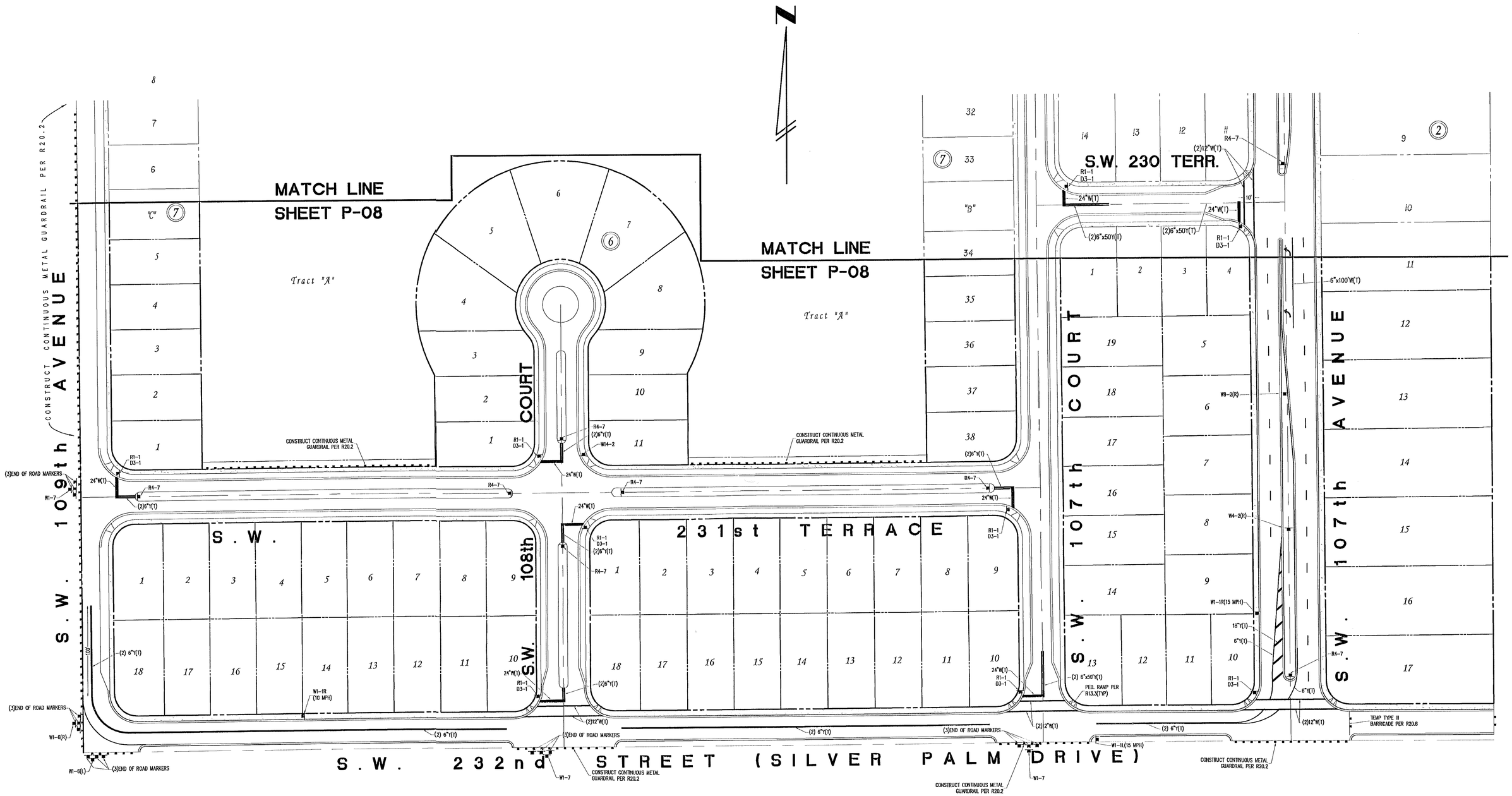

Call 48 hours before you dig

It's the Law!
1-800-432-4770

Sunshine State One Call of Florida, Inc.

No.	Date	Apvd.	J.N.	F.B.	Revision Description

Professional Land Surveyor No.
Professional Engineer No.
State of Florida

SILVER PALM LAKE

SIGNS & PAVEMENT MARKING PLAN (2)

E.R. BROWNELL & ASSOCIATES, INC.
CONSULTING ENGINEERS — LAND SURVEYORS
3152 Coral Way — Miami, Florida, 33145 — Phone: (305) 446-3511

Drawn by: AA	Ref.		Sheet P-09 of 9
Des. by: ZA	J.N. 55465	F.B.	Sk. No. P-641
Chk. by: JN	Scale: 1" = 50'	Date: 03/13/03	

03/18/03 @ 13:36
P-09.dwg

RESOLUTION 2022-04

A RESOLUTION OF THE BOARD OF SUPERVISORS OF THE SILVER PALMS COMMUNITY DEVELOPMENT DISTRICT, ADOPTING A DISTRICT POLICY PERTAINING TO MAINTAINING THE 20-FOOT STORMWATER RETENTION EASEMENT; ADOPTING GUIDELINES AND SPECIFICATIONS PERTAINING TO ANY HOMEOWNER MODIFICATIONS OF THE 20-FOOT STORMWATER RETENTION EASEMENT; PROVIDING FOR ENFORCEMENT; AND PROVIDING FOR AN EFFECTIVE DATE.

WHEREAS, the Silver Palms Community Development District (the "District") was established pursuant to Chapter 190, Florida Statutes and Ordinance 03-206 enacted by the Board of County Commissioners of Miami-Dade County, Florida; and

WHEREAS, the District is the owner of and is responsible for the operation and maintenance of that certain lake parcel located within the boundaries of the District and identified as Tract A on the Plat of Silver Palm Lake, as recorded at Plat Book 161, Page 71 of the Public Records of Miami-Dade County, Florida (the "Lake"); and

WHEREAS, the Lake is an integral part of the stormwater management and drainage system benefitting all lands within the boundaries of the District; and

WHEREAS, the Lake that is owned and maintained by the District typically includes submerged lands covered by water, the littoral shelf, and those typically dry sloped areas that include the lands running from the water line to just beyond the top of the lake bank of the Lake; and

WHEREAS, the Lake is surrounded by single-family residential lots whose rear yard lot lines are typically located just upward of the top of the sloped bank of the Lake; and

WHEREAS, the stormwater management and drainage system was designed to include a 20-foot easement that should remain free from structures and plantings at least 15 feet from the rear residential property lines (the "SWRE") within the residential lots and just upland beyond the top of the sloped bank, as more particularly shown in Exhibit A, attached hereto and made a part hereof; and

WHEREAS, after receiving the results of an inspection of the Lake and the stormwater management system by the District Engineer, Alvarez Engineers, Inc., and

reviewing the report pertaining to such inspection, the District Board of Supervisors (the "Board") finds that the rear yards of multiple single-family residential lots abutting the Lake have been modified to include structures and plantings which are and have the potential to adversely affect or otherwise damage the SWRE; and

WHEREAS, the SWRE is essential to the proper functioning of the stormwater management and drainage system, provides for pretreatment of runoff, provides environmental benefits promoting the overall health of the Lake and the water quality of the Lake, and serves to prevent and limit erosion protecting the integrity of the sloped lake bank; and

WHEREAS, in order to protect the stormwater management and drainage system and maintain the benefits and protections of the SWRE, the Board determines that it is necessary to adopt a policy relating to future modifications by residential property owners to the SWRE that allow residential property owners to maximize the use and development of their rear yards, subject to municipal, county, ordinances, covenants, and laws, while preserving the effect and purpose of the SWRE through the implementation of acceptable tree plantings.

NOW, THEREFORE, BE IT RESOLVED BY THE BOARD OF SUPERVISORS OF THE SILVER PALMS COMMUNITY DEVELOPMENT DISTRICT, THAT:

Section 1. The above recitals are true and correct and are incorporated in and adopted as part of this Resolution.

Section 2. The Board of Supervisors of the Silver Palms Community Development District hereby formally establishes and adopts, the "Silver Palms CDD Lake Bank Easement Guidelines," (the "Policy") as follows:

SILVER PALMS CDD
LAKE BANK EASEMENT
MODIFICATION GUIDELINES

1.0 **Title**. This may be cited and referred to as the Silver Palms CDD Lake Bank Easement Guidelines (the "Policy").

2.0 **Definitions**.

2.1 "District" shall mean the Silver Palms Community Development District, a local unit of special purpose government established pursuant to Chapter 190, Florida Statutes.

2.2 "SWRE" shall mean the twenty (20') foot distance from the rear residential property line to the Lake within the residential lots abutting the Lake and located upland just beyond the top of the sloped bank, as more particularly shown in Exhibit A, attached hereto and made a part hereof. The SWRE is an important facility that is part of the stormwater management and drainage system designed and constructed for the District.

2.3 "Effective Date" shall mean September 19, 2022, which is the date this Policy was first adopted by the Board.

2.4 "Approved Planting" shall mean, for the purposes of this Policy, Palm Trees, as shown in Exhibit "A" or as otherwise approved by the District Engineer of the District.

2.5 "Lake" shall mean Tract A of the Plat of Silver Palm Lake, as recorded at Plat Book 161, Page 71 of the Public Records of Miami-Dade County, Florida. The District owns fee title to the Lake, and the Lake is an integral part of the stormwater management and drainage system benefitting all lands within the boundaries of the District.

2.6 "Owner" shall mean the fee title owner of a residential lot abutting and immediately adjacent to the Lake.

2.7 "Policy" shall mean the Silver Palms CDD Lake Bank Easement Modification Guidelines, adopted pursuant to District Resolution 2022-04, as amended from time to time.

3.0 **SWRE Modifications On or After the Effective Date.** An Owner may modify the SWRE located in the rear yard of Owner's property, subject to satisfying each of the following conditions:

3.1 Any modification to the SWRE by Owner shall not include a permanent or impervious structure; and

3.2 Any tree planted in the SWRE by Owner must be in the upper five (5) feet of the SWRE, as long as they do not case shade that kills the grass, such as palm trees, with the exception of coconut trees; and

3.4 Owner has applied for and secured any and all required building and zoning permits from Miami-Dade County, and any other government entity or agency having jurisdiction thereof, and any such permits are valid at the time the modification is being constructed; and

3.5 The sloped lake bank within the parcel identified as the Lake is maintained sodded at all times at a 4:1 slope as required by applicable permits issued by the South Florida Water Management District and held by the District, that no modifications are made to the sloped lake bank or the Lake, and that any damages to the lake bank or Lake are corrected to the satisfaction of the District within fifteen (15) days of District sending, via U.S. Mail, Owner written notice of such damages; and

3.6 No encroachments whatsoever shall be made into the Lake parcel owned by the District; and

3.7 All improvements, construction, maintenance and work shall be subject to the rules and regulations of any federal, states and local laws, rules, and regulations that may be otherwise applicable, including any and all permits issued to the District by the South Florida Water Management District.

4.0 **SWRE Modifications Made Prior to the Effective Date.** The District acknowledges that the SWRE behind several residential lots abutting the Lake have already been modified as of the adoption of the Policy. For such properties, should Owner make any further changes to the project or improvement that modified the SWRE, the Owner shall be required to make such changes consistent with and in compliance with the Paving, Grading and Drainage plans approved by Miami-Dade County DERM on May 21, 2003. Owner must otherwise comply with each of the conditions set forth in Sections 3.1 through 3.7 of this Policy. Notwithstanding, should the upland improvements on an Owner's Property be contributing to erosion of the abutting sloped lake bank, pollutants entering the Lake, or any damage to the sloped lake bank or Lake, the Owner shall be required at Owner's expense to make such corrections restore such District-owned property in accordance with the provisions of section 3.5 above.

5.0 **Enforcement.** The District hereby authorizes, to the extent such authorization is required, the District Manager to implement this Policy in order to safeguard the integrity, design, and operation of the stormwater management and drainage system, ensure healthy water quality in the Lake, limit erosion of the lake banks, preserve the infrastructure constituting the stormwater management and drainage system, while protecting the residential properties and rights-of-way within the District from future flooding concerns and limiting maintenance costs to Owners. Nothing herein shall be construed as limiting or restricting the District's authority to enforce this Policy and its property interests pursuant to Chapter 190, Florida Statutes, and Florida law.

Section 3. The District Manager is hereby directed to take all actions necessary and consistent with the intent of this Resolution, including posting this Policy on the District's website and making the same generally available to members of the public.

Section 4. All resolutions or parts of resolutions in conflict herewith are repealed to the extent of such conflict.

Section 5. If any clause, section or other part or application of this Resolution is held by a court of competent jurisdiction to be unconstitutional, illegal or invalid, in part or as applied, it shall not affect the validity of the remaining portions or applications of this Resolution.

Section 6. This Resolution shall be effective immediately upon adoption.

PASSED AND ADOPTED BY THE BOARD OF SUPERVISORS OF THE SILVER PALMS COMMUNITY DEVELOPMENT DISTRICT, THIS _____ DAY OF _____, 2022.

ATTEST:	**SILVER PALMS COMMUNITY DEVELOPMENT DISTRICT**
_____	_____
Print name: _____	Print name:_____
Secretary/Assistant Secretary	**Chairman/Vice-Chairman**

DRAFT

Exhibit A

DRAFT

Silver Palms Community Development District
C/o Special District Services, Inc.
2501A Burns Road
Palm Beach Gardens, FL 33410

August 25, 2022

Raul Medero
and/or Current Property Owner
10882 SW 229 Street
Miami, Florida 33170

RE: Request for Tree Trimming

Dear Property Owner,

This firm serves as District Manager for the Silver Palms Community Development District (the "District"). A site visit with the District Engineers has brought to our attention that, along with other factors, the shade cast by the overgrown avocado tree planted in the rear of your property does not allow the grass to grow as intended. The lack of grass is causing the lake bank to eroded. Since the shade has killed the grass, the soil is exposed and the rain washes it off, causing erosion. We request your assistance in trimming back all the branches over the lake bank to prevent further damage.

The mentioned tree must be trimmed, specifically the branches exceeding your backyard fence, within thirty (30) days of the date of this letter. Once done, kindly notify this office in order for us to be able to inspect it.

Your cooperation in this matter is greatly appreciated. Should you have any questions regarding this information please do not hesitate to contact me, at 786-503-1633, or via email at rgalvis@sdsinc.org.

Sincerely,

Ronald Galvis
Ronald Galvis
Field Operations Manager

cc: Gloria Perez, District Manager *(via email only)*
Juan Alvarez, Alvarez Engineering Inc., District Engineer (*via email only*)
Reynaldo Chinea, Alvarez Engineering Inc., District Engineer (*via email only*)
Gregory F. George, Billing, Cochran, Lyles, Mauro & Ramsey, P.A. *(via email only)*
Fernando Toledo, Turf Management, (*via email only*)
Todd Barhydt, Solitude Lake Management (*via email only*)

ENCLOSURES

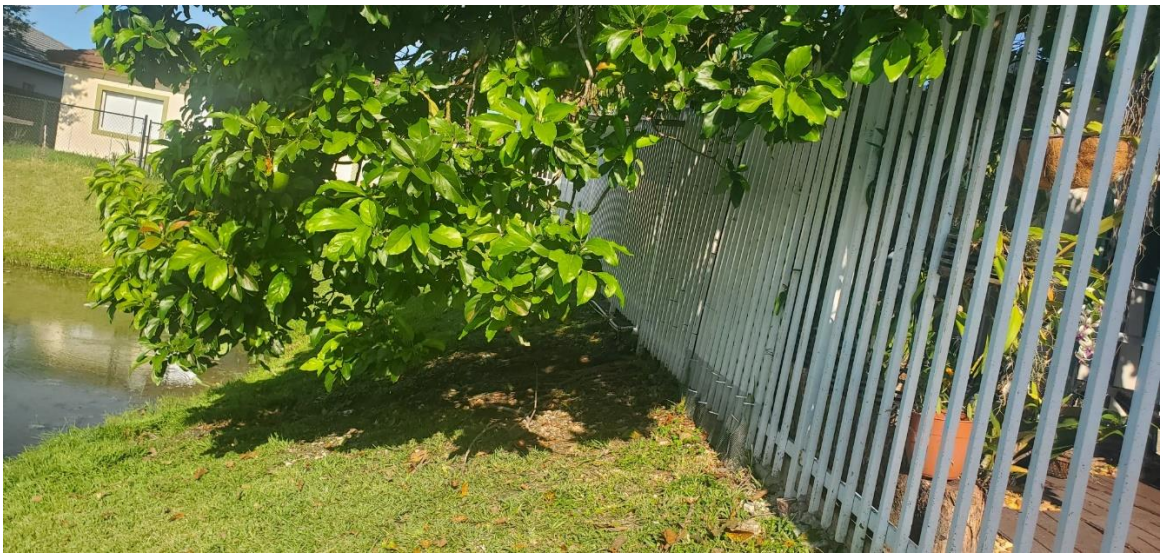

Silver Palms Community Development District
C/o Special District Services, Inc.
2501A Burns Road
Palm Beach Gardens, FL 33410

August 25, 2022

Oscar Hernandez
and/or Current Property Owner
10888 SW 229th Street
Miami, Florida 33170

RE: Request for Structure Correction

Dear Property Owner,

This firm serves as District Manager for the Silver Palms Community Development District (the "District"). A site visit with the District Engineer has brought to our attention that a 2" PVC Pipe is draining from your property's backyard onto the lake bank. This drainage from your property has caused depression/erosion in the higher portion of the lake bank and sedimentation of that eroded material on the lower portion of it. A concrete slab is also constructed in the rear of your property from the residence to the lot fence. During rain events, the concrete slab causes runoff from your lot that flows to the District-owned lake. This increased runoff has caused about 4 inches of erosion along the backyard fence, which has even uncovered the concrete footings of the fence posts.

Please be advised that, according to the "Silver Palm Lake - Paving, Grading and Drainage" approved plans (enclosed), there are specific berm requirements along the rear of the lots to prevent runoff from private property onto the lake banks to prevent erosion (refer to page 7, section D). The concrete slab in your property, as constructed, does not meet the requirements of the Paving, Grading and Drainage plans.

The above-mentioned pipe must be removed, and the concrete slabs must be verified, corrected, and or removed to ensure compliance with the Silver Palm Lake – Paving, Grading and Drainage plans.

You are required to bring your property into compliance with all applicable State and Miami – Dade County requirements, within thirty (30) days of the date of this letter.

Your cooperation in this matter is greatly appreciated. Should you have any questions regarding this information please do not hesitate to contact me, at 786-503-1633, or via email at rgalvis@sdsinc.org.

Sincerely,

Ronald Galvis
Ronald Galvis
Field Operations Manager

cc: Gloria Perez, District Manager *(via email only)*
Juan Alvarez, Alvarez Engineering Inc., District Engineer (*via email only*)
Reynaldo Chinea, Alvarez Engineering Inc., District Engineer (*via email only*)
Gregory F. George, Billing, Cochran, Lyles, Mauro & Ramsey, P.A. *(via email only)*
Fernando Toledo, Turf Management, (*via email only*)
Todd Barhydt, Solitude Lake Management (*via email only*)

ENCLOSURES

Silver Palms
Community Development District

Financial Report For
August 2022

Silver Palms Community Development District
Budget vs. Actual
October 2021 through August 2022

	Oct 21 - Aug 22	21/22 Budget	$ Over Budget	% of Budget
Income				
363.100 · Admin Assessments	61,742.13	61,664.00	78.13	100.13%
363.101 · Maintenance Assessments	38,646.35	38,646.00	0.35	100.0%
363.810 · Debt Assessment	122,447.40	122,447.00	0.40	100.0%
363.820 · Debt Assessment-Paid To Trustee	-116,593.05	-115,100.00	-1,493.05	101.3%
363.830 · County Tax Collector Fee	-2,143.16	-4,455.00	2,311.84	48.11%
363.831 · Discounts for Early Payments	-8,508.27	-8,910.00	401.73	95.49%
369.401 · Interest Income	216.09	180.00	36.09	120.05%
Total Income	95,807.49	94,472.00	1,335.49	101.41%
Expense				
511.122 · Payroll Tax Expense	229.50	480.00	-250.50	47.81%
511.131 · Supervisors Fees	3,000.00	6,000.00	-3,000.00	50.0%
511.306 · Lawn Maint/Landscaping	22,455.00	22,000.00	455.00	102.07%
511.307 · Aquatic Maintenance	1,835.24	2,000.00	-164.76	91.76%
511.308 · Maint/District Improvements	0.00	4,205.00	-4,205.00	0.0%
511.309 · Contingency/Reserve	0.00	6,223.00	-6,223.00	0.0%
511.310 · Engineering	2,630.00	1,900.00	730.00	138.42%
511.311 · Management Fees	17,567.00	19,164.00	-1,597.00	91.67%
511.312 · Secretarial Fees	2,475.00	2,700.00	-225.00	91.67%
511.315 · Legal Fees	6,513.38	8,000.00	-1,486.62	81.42%
511.318 · Assessment/Tax Roll	0.00	3,500.00	-3,500.00	0.0%
511.320 · Audit Fees	3,700.00	3,700.00	0.00	100.0%
511.450 · Insurance	5,706.00	6,000.00	-294.00	95.1%
511.480 · Legal Advertisements	105.77	550.00	-444.23	19.23%
511.512 · Miscellaneous	498.64	1,000.00	-501.36	49.86%
511.513 · Postage and Delivery	163.21	250.00	-86.79	65.28%
511.514 · Office Supplies	287.50	525.00	-237.50	54.76%
511.540 · Dues, License & Subscriptions	175.00	175.00	0.00	100.0%
511.733 · Trustee Fees	4,079.63	4,100.00	-20.37	99.5%
511.734 · Continuing Disclosure Fee	0.00	250.00	-250.00	0.0%
511.750 · Website Management	1,604.13	1,750.00	-145.87	91.67%
Total Expense	73,025.00	94,472.00	-21,447.00	77.3%
Net Income	**22,782.49**	**0.00**	**22,782.49**	**100.0%**

`

SILVER PALMS COMMUNITY DEVELOPMENT DISTRICT
MONTHLY FINANCIAL REPORT
AUGUST 2022

REVENUES	Annual Budget 10/1/21 - 9/30/22	Actual Aug-22	Year To Date Actual 10/1/21 - 8/31/22
Administrative Assessments	61,664	2	61,742
Maintenance Assessments	38,646	0	38,646
Debt Assessments	122,447	0	122,447
Interest Income	180	0	216
Total Revenues	**$ 222,937**	**$ 2**	**$ 223,051**
EXPENDITURES			
Maintenance Expenditures			
Lawn Maintenance/Landscaping	22,000	2,055	22,455
Aquatic Maintenance	2,000	166	1,835
Maintenance/District Improvements	4,205	0	0
Engineering/Inspections	1,900	0	2,630
Contingency/Reserve	6,223	0	0
Total Maintenance Expenditures	**$ 36,328**	**$ 2,221**	**$ 26,920**
Adminstrative Expenditures			
Supervisor Fees	6,000	0	3,000
Payroll Taxes (Employer)	480	0	230
Management	19,164	1,597	17,567
Secretarial	2,700	225	2,475
Legal	8,000	0	6,513
Assessment Roll	3,500	0	0
Audit Fees	3,700	0	3,700
Insurance	6,000	0	5,706
Legal Advertisements	550	0	106
Miscellaneous	1,000	9	499
Postage	250	12	163
Office Supplies	525	3	288
Dues & Subscriptions	175	0	175
Trustee Fee	4,100	0	4,080
Continuing Disclosure Fee	250	0	0
Website Management	1,750	145	1,603
Total Administrative Expenditures	**$ 58,144**	**$ 1,991**	**$ 46,105**
Total Expenditures	**$ 94,472**	**$ 4,212**	**$ 73,025**
Revenues Less Expenditures	**$ 128,465**	**$ (4,210)**	**$ 150,026**
Bond Payments	(115,100)	0	(116,593)
Balance	**$ 13,365**	**$ (4,210)**	**$ 33,433**
County Appraiser & Tax Collector Fee	(4,455)	0	(2,143)
Discounts For Early Payments	(8,910)	0	(8,508)
Excess/ (Shortfall)	**$ -**	**$ (4,210)**	**$ 22,782**
Carryover From Prior Year	0	0	0
Net Excess/ (Shortfall)	**$ -**	**$ (4,210)**	**$ 22,782**

Bank Balance As Of 8/31/22	**$ 217,353.12**
Accounts Payable As Of 8/31/22	**$ 5,211.94**
Accounts Receivable As Of 8/31/22	**$ -**
Available Funds As Of 8/31/22	**$ 212,141.18**

SILVER PALMS CDD
TAX COLLECTIONS
2021-2022

#	ID#	PAYMENT FROM	DATE	FOR	Tax Collect Receipts	Interest Received	Commissions Paid	Discount	Net From Tax Collector	Admin. Assessment Income (Before Discounts & Fee)	Maint Assessment Income (Before Discounts & Fee)	Debt Assessment Income (Before Discounts & Fee)	Admin. Assessment Income (After Discounts & Fee)	Maint Assessment Income (After Discounts & Fee)	Debt Assessment Income (After Discounts & Fee)	Debt Assessments Paid to Trustee
									$222,757.00	**$61,664.00**	**$38,646.00**	**$ 122,447.00**	**$61,664.00**	**$38,646.00**	**$ 122,447.00**	
									$209,392.00	**$57,964.00**	**$36,328.00**	**$ 115,100.00**	**$57,964.00**	**$36,328.00**	**$ 115,100.00**	**115,100.00**
1	1	Miami-Dade Tax Collector	11/26/21	NAV Taxes	$ 13,290.95		$ (127.46)	$ (545.39)	$ 12,618.10	$ 3,678.90	$ 2,306.00	$ 7,306.05	$ 3,492.60	$ 2,189.25	$ 6,936.25	$ 6,936.25
2	2	Miami-Dade Tax Collector	12/03/21	NAV Taxes	$ 156,263.25		$ (1,500.12)	$ (6,250.53)	$ 148,512.60	$ 43,257.39	$ 27,110.07	$ 85,895.79	$ 41,111.75	$ 25,765.40	$ 81,635.45	$ 81,635.45
3	3	Miami-Dade Tax Collector	12/08/21	NAV Taxes	$ 22,165.00		$ (212.79)	$ (886.60)	$ 21,065.61	$ 6,135.80	$ 3,845.40	$ 12,183.80	$ 5,831.41	$ 3,654.70	$ 11,579.50	$ 11,579.50
4	4	Miami-Dade Tax Collector	12/20/21	NAV Taxes	$ 14,407.25		$ (138.42)	$ (565.21)	$ 13,703.62	$ 3,988.27	$ 2,499.51	$ 7,919.47	$ 3,793.62	$ 2,377.40	$ 7,532.60	$ 7,532.60
5	5	Miami-Dade Tax Collector	01/11/22	NAV Taxes	$ 4,991.15		$ (48.41)	$ (149.74)	$ 4,793.00	$ 1,381.55	$ 865.95	$ 2,743.65	$ 1,326.65	$ 831.60	$ 2,634.75	$ 2,634.75
6	6	Miami-Dade Tax Collector	02/07/22	NAV Taxes	$ 3,324.75		$ (32.58)	$ (66.48)	$ 3,225.69	$ 920.37	$ 576.81	$ 1,827.57	$ 892.94	$ 559.60	$ 1,773.15	$ 1,773.15
7	Int - 1	Miami-Dade Tax Collector	02/28/22	Interest		$ 7.70			$ 7.70	$ 7.70			$ 7.70			$ -
8	7	Miami-Dade Tax Collector	03/07/22	NAV Taxes	$ 3,324.75		$ (32.81)	$ (44.32)	$ 3,247.62	$ 920.37	$ 576.81	$ 1,827.57	$ 898.97	$ 563.40	$ 1,785.25	$ 1,785.25
9	8	Miami-Dade Tax Collector	04/12/22	NAV Taxes	$ 2,774.65		$ (27.74)		$ 2,746.91	$ 768.00	$ 481.40	$ 1,525.25	$ 760.31	$ 476.60	$ 1,510.00	$ 1,510.00
10	Int - 2	Miami-Dade Tax Collector	04/27/22	Interest		$ 1.40			$ 1.40	$ 1.40			$ 1.40			$ -
11	9	Miami-Dade Tax Collector	05/06/22	NAV Taxes/Interest	$ 2,216.50	$ 66.50	$ (22.83)		$ 2,260.17	$ 680.35	$ 384.40	$ 1,218.25	$ 673.52	$ 380.55	$ 1,206.10	$ 1,206.10
12	Int - 3	Miami-Dade Tax Collector	08/03/22	Interest		$ 2.03			$ 2.03	$ 2.03			$ 2.03			$ -
13									$ -							$ -
14									$ -							$ -
15									$ -							$ -
					$ 222,758.25	$ 77.63	$ (2,143.16)	$ (8,508.27)	$ 212,184.45	$ 61,742.13	**$ 38,646.35**	**$ 122,447.40**	$ 58,792.90	$ 36,798.50	$ 116,593.05	$ 116,593.05

Assessment Roll:
$222,758.25

Note: $222,757, $61,664, $38,646 and $122,447 are 2021/2022 Budgeted assessments before discounts and fees.
$209,392, $57,964, $36,328 and $115,100 are 2021/2022 Budgeted assessments after discounts and fees.

$ 222,758.25	
$ 77.63	$ 212,184.45
$ (61,742.13)	$ (58,792.90)
$ (38,646.35)	$ (36,798.50)
$ (122,447.40)	$ (116,593.05)
$ -	$ -

TEMPLATE FOR LOCAL GOVERNMENTS AND SPECIAL DISTRICTS FOR PERFORMING A STORMWATER NEEDS ANALYSIS PURSUANT TO SECTION 5 OF SECTION 403.9302, FLORIDA STATUTES

INTRODUCTION

As part of the 2021 regular session, the Legislature recognized the need for a long-term planning process for stormwater and wastewater. Section 403.9302, Florida Statutes, requires a 20-year needs analysis from the local governments providing stormwater services. Because this planning document is forward-looking, it will necessarily include a large number of assumptions about future actions. These assumptions should be based on any available information coupled with best professional judgment of the individuals completing the document.

Completing this template by June 30, 2022, will fulfill the statutory requirements for the first round of 20-year needs analyses for stormwater. The template was generated by EDR in cooperation with local governments, Special Districts, the Florida Department of Environmental Protection (DEP), the Water Management Districts, the Florida Stormwater Association, private consultants, and others. Use of this tool will help ensure that information is compiled consistently for the Office of Economic & Demographic Research's (EDR) report to the Legislature.

For the purposes of this document, a stormwater management program and a stormwater management system are as defined in statute (s. 403.031(15) and (16), F.S., respectively; language provided here: https://www.flsenate.gov/Laws/Statutes/2021/403.031). Plainly speaking, the "program" is the institutional framework whereby stormwater management activities (MS4 NPDES permit activities, and other regulatory activities, construction, operation and maintenance, *etc.*) are carried out by the public authority. The "system" comprises the physical infrastructure that is owned and/or operated by the local government or special district that specifically is intended to control, convey or store stormwater runoff for treatment and flood protection purposes.

For the purposes of this document, the following guiding principles have been adopted:

- Stormwater systems or facilities owned and operated by any of the following are excluded from reporting requirements for local governments and special districts:
  - Private entities or citizens
  - Federal government
  - State government, including the Florida Department of Transportation (FDOT)
  - Water Management Districts
  - School districts
  - State universities or Florida colleges
- Local government expenditures associated with routine operation and maintenance are fully funded prior to commencing new projects and initiatives.
- Local government submissions will include the activities of dependent special districts. Only independent special districts report separately. For a list of all special districts in the state and their type (*i.e.,* dependent or independent), please see the Department of Economic Opportunity's Official List of Special Districts at the following link: http://specialdistrictreports.floridajobs.org/webreports/alphalist.aspx.
- With respect to federal and state statutes and rulemaking, current law and current administration prevails throughout the 20-year period. In other words, the state's present legal framework (*i.e.,* the status quo) continues throughout the period.

GENERAL INSTRUCTIONS FOR USING THE TEMPLATE

Instructions for submitting the template are still under development. Additional information regarding submission and answers to frequently asked questions will be posted on EDR's website, along with other useful materials, here: http://edr.state.fl.us/Content/natural-resources/stormwaterwastewater.cfm

The statutory language forms the titles for each part. This template asks that you group your recent and projected expenditures in prescribed categories. A detailed list of the categories is provided in part 5.0.

The same project should not appear on multiple tables in the jurisdiction's response unless the project's expenditures are allocated between those tables. All expenditures should be reported in $1,000s (*e.g.,* five hundred thousand dollars should be reported as $500).

For any jurisdiction that is contracting with another jurisdiction where both could be reporting the same expenditure, please contact EDR for additional guidance. In situations where a reporting jurisdiction contracts with a non-reporting jurisdiction, (*i.e.,* FDOT, the water management districts, the state or federal government), the reporting jurisdiction should include the expenditures.

When reporting cost information, please only include the expenditures that have flowed, are flowing, or will likely flow through your jurisdiction's budget. While necessary to comply with the statute, the concept of "future expenditures" should be viewed as an expression of identified needs.

These projections are necessarily speculative and do not represent a firm commitment to future budget actions by the jurisdiction.

This Excel workbook contains three worksheets for data entry. (Along the bottom of the screen, the three tabs are highlighted green.) Empty cells with visible borders are unlocked for data entry. In the first tab, titled "Background through Part 4," the information requested is either text, a dropdown list (*e.g.,* Yes or No), or a checkbox. The next tab, "Part 5 through Part 8," contains tables for expenditure or revenue data as well as some follow-up questions that may have checkboxes, lists, or space for text.

In Part 5 and Part 6, the expenditure tables have space for up to 5 projects. More projects can be listed in the "Additional Projects" tab. This tab contains a table with space for up to 200 additional projects. In order for these additional projects and expenditures to be correctly classified and included in the final totals, each project must be assigned a Project Type and Funding Source Type the from the dropdown lists in columns B and C.

Links to Template Parts:

- Background Information
- Part 1
- Part 2
- Part 3
- Part 4
- Part 5
- Part 6
- Part 7
- Part 8
- Additional Projects - This table contains additional rows for projects that do not fit into the main tables in Parts 5 and 6

Background Information

Please provide your contact and location information, then proceed to the template on the next sheet.

Name of Local Government:	Silver Palms Community Development District ("CDD")
Name of stormwater utility, if applicable:	N/A
Contact Person	
Name:	Juan R. Alvarez, P.E.
Position/Title:	CDD Engineer
Email Address:	Juan.Alvarez@Alvarezeng.com
Phone Number:	305-640-1345

Indicate the Water Management District(s) in which your service area is located.

☐	Northwest Florida Water Management District (NWFWMD)
☐	Suwannee River Water Management District (SRWMD)
☐	St. Johns River Water Management District (SJRWMD)
☐	Southwest Florida Water Management District (SWFWMD)
☑	South Florida Water Management District (SFWMD)

Indicate the type of local government:

☐	Municipality
☐	County
☑	Independent Special District

Part 1.0 Detailed description of the stormwater management program (Section 403.9302(3)(a), F.S.)

The stormwater management program, as defined in the Introduction, includes those activities associated with the management, operation and maintenance, and control of stormwater and stormwater management systems, including activities required by state and federal law. The detailed program description is divided into multiple subparts consisting of narrative and data fields.

Part 1.1 Narrative Description:

Please provide a brief description of the current institutional strategy for managing stormwater in your jurisdiction. Please include any mission statement, divisions or departments dedicated solely or partly to managing stormwater, dedicated funding sources, and other information that best describes your approach to stormwater:

The drainage system, consisting of storm sewers, exfiltration trenches, and control structures has been conveyed to the County for ownership, operations and maintenance. The CDD maintains the lake and dry retention areas by checking the water quality and mowing the lake banks. The CDD program is funded by non-ad-valorem assessments levied on the properties within the CDD. Yearly collection of assessments is through the County tax bill.

On a scale of 1 to 5, with 5 being the highest, please indicate the importance of each of the following goals for your program:

0	1	2	3	4	5	
☐	☐	☐	☐	☐	☑	Drainage & flood abatement (such as flooding events associated with rainfall and hurricanes)
☐	☐	☐	☐	☐	☑	Water quality improvement (TMDL Process/BMAPs/other)
☐	☑	☐	☐	☐	☐	Reduce vulnerability to adverse impacts from flooding related to increases in frequency and duration of rainfall events, storm surge and sea level rise
						Other:
☐	☐	☐	☐	☐	☐	
☐	☐	☐	☐	☐	☐	
☐	☐	☐	☐	☐	☐	
☐	☐	☐	☐	☐	☐	

Part 1.2 Current Stormwater Program Activities:

Please provide answers to the following questions regarding your stormwater management program.

- Does your jurisdiction have an NPDES Municipal Separate Storm Sewer System (MS4) Permit? No

  If yes, is your jurisdiction regulated under Phase I or Phase II of the NPDES Program:

- Does your jurisdiction have a dedicated stormwater utility? No

  If no, do you have another funding mechanism? Yes

  If yes, please describe your funding mechanism.

  The CDD stormwater program is funded by non-ad-valorem assessments levied on the properties within the CDD. Yearly collection of the assessments is through the County tax bill.

- Does your jurisdiction have a Stormwater Master Plan or Plans? Yes

  If Yes:

  How many years does the plan(s) cover? 1

  Are there any unique features or limitations that are necessary to understand what the plan does or does not address?

  No

  Please provide a link to the most recently adopted version of the document (if it is published online):

  N/A

- Does your jurisdiction have an asset management (AM) system for stormwater infrastructure? No

  If Yes, does it include 100% of your facilities?

  If your AM includes less than 100% of your facilities, approximately what percent of your facilities are included?

- Does your stormwater management program implement the following (answer Yes/No):

A construction sediment and erosion control program for new construction (plans review and/or inspection)?	Yes
An illicit discharge inspection and elimination program?	No
A public education program?	No
A program to involve the public regarding stormwater issues?	No
A "housekeeping" program for managing stormwater associated with vehicle maintenance yards, chemical storage, fertilizer management, *etc.* ?	No
A stormwater ordinance compliance program (*i.e.,* for low phosphorus fertilizer)?	No
Water quality or stream gage monitoring?	Yes
A geospatial data or other mapping system to locate stormwater infrastructure (GIS, *etc.*)?	No
A system for managing stormwater complaints?	Yes

Other specific activities?

Notes or Comments on any of the above:

CDD Manager responsibilities include documenting stormwater complaints from residents or issues observed by field personnel and referring them to the CDD Engineer for assessment and solution.

Part 1.3 Current Stormwater Program Operation and Maintenance Activities

Please provide answers to the following questions regarding the operation and maintenance activities undertaken by your stormwater management program.

- Does your jurisdiction typically assume maintenance responsibility for stormwater systems associated with new private development (*i.e.,* systems that are dedicated to public ownership and/or operation upon completion)? Yes

Notes or Comments on the above:

The CDD operates and maintains systems located within parcels that are either owned by the CDD, or that the CDD has an easement over them. The CDD does not maintain systems within the CDD boundaries that have been conveyed to the County or to a municipality.

- Does your stormwater operation and maintenance program implement any of the following (answer Yes/No):

Routine mowing of turf associated with stormwater ponds, swales, canal/lake banks, *etc.* ?	Yes
Debris and trash removal from pond skimmers, inlet grates, ditches, *etc.* ?	Yes
Invasive plant management associated with stormwater infrastructure?	Yes
Ditch cleaning?	Yes
Sediment removal from the stormwater system (vactor trucks, other)?	No
Muck removal (dredging legacy pollutants from water bodies, canal, *etc.*)?	No
Street sweeping?	No
Pump and mechanical maintenance for trash pumps, flood pumps, alum injection, *etc.* ?	No
Non-structural programs like public outreach and education?	No

Other specific routine activities?

N/A

Part 2. Detailed description of the stormwater management system and its facilities and projects (continued Section 403.9302(3)(a), F.S.)

A stormwater management system, as defined in the Introduction, includes the entire set of site design features and structural infrastructure for collection, conveyance, storage, infiltration, treatment, and disposal of stormwater. It may include drainage improvements and measures to prevent streambank channel erosion and habitat degradation. This section asks for a summary description of your stormwater management system. It is not necessary to provide geospatial asset data or a detailed inventory. For some, it may be possible to gather the required data from your Asset Management (AM) system. For others, data may be gathered from sources such as an MS4 permit application, aerial photos, past or ongoing budget investments, water quality projects, or any other system of data storage/management that is employed by the jurisdiction.

Please provide answers to the following questions regarding your stormwater system inventory. Enter zero (0) if your system does not include the component.

	Number	Unit of Measurement
Estimated feet or miles of buried culvert:	0.00	
Estimated feet or miles of open ditches/conveyances (lined and unlined) that are maintained by the stormwater program:	0.00	
Estimated number of storage or treatment basins (*i.e.,* wet or dry ponds):	1	
Estimated number of gross pollutant separators including engineered sediment traps such as baffle boxes, hydrodynamic separators, *etc.* :	0	
Number of chemical treatment systems (*e.g.,* alum or polymer injection):	0	
Number of stormwater pump stations:	0	
Number of dynamic water level control structures (*e.g.,* operable gates and weirs that control canal water levels):	0	
Number of stormwater treatment wetland systems:		
Other:		

Notes or Comments on any of the above:

Which of the following green infrastructure best management practices do you use to manage water flow and/or improve water quality (answer Yes/No):

Best Management Practice	Current	Planned
Tree boxes	No	No
Rain gardens	No	No
Green roofs	No	No
Pervious pavement/pavers	No	No
Littoral zone plantings	No	No
Living shorelines	No	No
Other Best Management Practices:		

Please indicate which resources or documents you used when answering these questions (check all that apply).

- ☐ Asset management system
- ☐ GIS program
- ☐ MS4 permit application
- ☑ Aerial photos
- ☐ Past or ongoing budget investments
- ☐ Water quality projects

Other(s):

Paving, Grading, Drainage plans and CDD records.

Part 3. The number of current and projected residents served calculated in 5-year increments (Section 403.9302(3)(b), F.S.)

Counties and municipalities: Instead of requiring separate population projections, EDR will calculate the appropriate population estimates for each municipality or the unincorporated area of the county. If your service area is less than or more than your local government's population, please describe in the first text box provided below for part 4.0.

Independent Special Districts:

If an independent special district's boundaries are completely aligned with a county or a municipality, identify that jurisdiction here:

Miami-Dade County

Any independent special district whose boundaries do not coincide with a county or municipality must submit a GIS shapefile with the current and projected service area. EDR will calculate the appropriate population estimates based on that map. Submission of this shapefile also serves to complete Part 4.0 of this template.

Part 4.0 The current and projected service area for the stormwater management program or stormwater management system (Section 403.9302(3)(c), F.S.)

Rather than providing detailed legal descriptions or maps, this part of the template is exception-based. In this regard, if the stormwater service area is less than or extends beyond the geographic limits of your jurisdiction, please explain.

The current service area for the stormwater management program is the area of the CDD, 47.9 acres, and does not extend beyond the boundaries of the CDD.

Similarly, if your service area is expected to change within the 20-year horizon, please describe the changes (*e.g.,* the expiration of an interlocal agreement, introduction of an independent special district, *etc.*).

The service area is not expected to change.

Proceed to Part 5

Part 5.0 The current and projected cost of providing services calculated in 5-year increments (Section 403.9302(3)(d), F.S.)

Given the volume of services, jurisdictions should use the template's service groupings rather than reporting the current and projected cost of each individual service. Therefore, for the purposes of this document, "services" means:

1. Routine operation and maintenance (inclusive of the items listed in Part 1.3 of this document, ongoing administration, and non-structural programs)
2. Expansion (that is, improvement) of a stormwater management system.

Expansion means new work, new projects, retrofitting, and significant upgrades. Within the template, there are four categories of expansion projects.

1. Flood protection, addressed in parts 5.2 and 5.3… this includes capital projects intended for flood protection/flood abatement
2. Water quality, addressed in part 5.2 and 5.3… this includes stormwater projects related to water quality improvement, such as BMAPs; projects to benefit natural systems through restoration or enhancement; and stormwater initiatives that are part of aquifer recharge projects
3. Resiliency, addressed in part 5.4… this includes all major stormwater initiatives that are developed specifically to address the effects of climate change, such as sea level rise and increased flood events
4. End of useful life replacement projects, addressed in part 6.0… this includes major expenses associated with the replacement of aging infrastructure

While numbers 3 and 4 have components that would otherwise fit into the first two categories, they are separately treated given their overall importance to the Legislature and other policymakers.

Expansion projects are further characterized as currently having either a committed funding source or no identified funding source. Examples of a committed funding source include the capacity to absorb the project's capital cost within current budget levels or forecasted revenue growth; financing that is underway or anticipated (bond or loan); known state or federal funding (appropriation or grant); special assessment; or dedicated cash reserves for future expenditure.

All answers should be based on local fiscal years (LFY, beginning October 1 and running through September 30). Please use nominal dollars for each year, but include any expected cost increases for inflation or population growth. Please check the EDR website for optional growth rate schedules that may be helpful.

If you have more than 5 projects in a particular category, please use the "Additional Projects" tab. There, you can use dropdown lists to choose the project category and whether there is a committed funding source, then enter the project name and expenditure amounts.

Part 5.1 Routine Operation and Maintenance

Please complete the table below, indicating the cost of operation and maintenance activities for the current year and subsequent five-year increments throughout the 20-year horizon. Your response to this part should exclude future initiatives associated with resiliency or major expenses associated with the replacement of aging infrastructure; these activities are addressed in subparts 5.4 and 6.0. However, do include non-structural programs like public outreach and education in this category.

If specific cost data is not yet available for the current year, the most recent (2020-21) O&M value can be input into the optional growth rate schedules (available on EDR's website as an Excel workbook). The most recent O&M value can be grown using the provided options for inflation, population growth, or some other metric of your choosing. If the growth in your projected total O&M costs is more than 15% over any five-year increment, please provide a brief explanation of the major drivers.

Routine Operation and Maintenance

	Expenditures (in $thousands)				
	LFY 2021-2022	2022-23 to 2026-27	2027-28 to 2031-32	2032-33 to 2036-37	2037-38 to 2041-42
Operation and Maintenance Costs	24	128	143	161	181
Brief description of growth greater than 15% over any 5-year period:					

Part 5.2 Future Expansion (Committed Funding Source)

Please list expansion projects and their associated costs for the current year and subsequent five-year increments throughout the 20-year planning horizon. In this section, include stormwater system expansion projects or portions of projects with a committed funding source. If you include a portion of a project that is not fully funded, the project's remaining cost must be included in part 5.3, Expansion Projects with No Identified Funding Source.

Though many, if not most, stormwater projects benefit both flood protection and water quality, please use your best judgment to either allocate costs or simply select the primary purpose from the two categories below.

5.2.1 Flood Protection (Committed Funding Source): Provide a list of all scheduled new work, retrofitting and upgrades related to flood protection/flood abatement. Include infrastructure such as storage basins, piping and other conveyances, land purchases for stormwater projects, *etc* . Also include major hardware purchases such as vactor/jet trucks.

5.2.2 Water Quality Projects (Committed Funding Source): Please provide a list of scheduled water quality projects in your jurisdiction, such as treatment basins, alum injection systems, green infrastructure, water quality retrofits, *etc.,* that have a direct stormwater component. The projected expenditures should reflect only those costs.

- If you are party to an adopted BMAP, please include the capital projects associated with stormwater in this table. Include BMAP project number, cost to your jurisdiction, and year(s) that capital improvement costs are to be incurred. For reference, DEP publishes a complete list of adopted BMAP projects as an appendix in their Annual STAR Report.

Expansion Projects with a Committed Funding Source

5.2.1 Flood Protection Expenditures (in $thousands)

Project Name	LFY 2021-2022	2022-23 to 2026-27	2027-28 to 2031-32	2032-33 to 2036-37	2037-38 to 2041-42
N/A					

5.2.2 Water Quality Expenditures (in $thousands)

Project Name (or, if applicable, BMAP Project Number or ProjID)	LFY 2021-2022	2022-23 to 2026-27	2027-28 to 2031-32	2032-33 to 2036-37	2037-38 to 2041-42
N/A					

Part 5.3 Future Expansion with No Identified Funding Source

Please provide a list of known expansion projects or anticipated need(s) without formal funding commitments(s), formal pledges, or obligations. If you included a portion of a project that was partially covered by a committed source in part 5.2 above, list the projects and their remaining costs below.

5.3.1 Future Flood Protection with No Identified Funding Source: Please provide a list of future flood protection/flood abatement projects, associated land purchases, or major hardware purchases that are needed in your jurisdiction over the next 20 years. Future needs may be based on Master Plans, Comprehensive Plan Elements, Water Control Plans, areas of frequent flooding, hydrologic and hydraulic modeling, public safety, increased frequency of maintenance, desired level of service, flooding complaints, *etc.*

5.3.2 Future Water Quality Projects with no Identified Funding Source: Please provide a list of future stormwater projects needed in your jurisdiction over the next 20 years that are primarily related to water quality issues. Future needs may be based on proximity to impaired waters or waters with total maximum daily loads (TMDLs), BMAPs, state adopted Restoration Plans, Alternative Restoration Plans, or other local water quality needs.

- If you are party to an adopted BMAP, please list capital projects associated with stormwater. Include BMAP project number, cost to your jurisdiction, and year(s) that capital improvement costs are to be incurred.
- List other future water quality projects, including those in support of local water quality goals as well as those identified in proposed (but not yet adopted) BMAPs.

Expansion Projects with No Identified Funding Source

5.3.1 Flood Protection Expenditures (in $thousands)

Project Name	LFY 2021-2022	2022-23 to 2026-27	2027-28 to 2031-32	2032-33 to 2036-37	2037-38 to 2041-42
N/A					

5.3.2 Water Quality Expenditures (in $thousands)

Project Name (or, if applicable, BMAP Project Number or ProjID)	LFY 2021-2022	2022-23 to 2026-27	2027-28 to 2031-32	2032-33 to 2036-37	2037-38 to 2041-42
N/A					

Please indicate which resources or documents you used to complete table 5.3 (check all that apply).

- ☐ Stormwater Master Plan
- ☐ Basin Studies or Engineering Reports
- ☐ Adopted BMAP
- ☐ Adopted Total Maximum Daily Load
- ☐ Regional or Basin-specific Water Quality Improvement Plan or Restoration Plan

Specify:

- ☐ Other(s):

Part 5.4 Stormwater projects that are part of resiliency initiatives related to climate change

Please list any stormwater infrastructure relocation or modification projects and new capital investments specifically needed due to sea level rise, increased flood events, or other adverse effects of climate change. When aggregating, include O&M costs for these future resiliency projects and investments in this table (not in part 5.1). If your jurisdiction participates in a Local Mitigation Strategy (LMS), also include the expenditures associated with your stormwater management system in this category (for example, costs identified on an LMS project list).

Resiliency Projects with a Committed Funding Source Expenditures (in $thousands)

Project Name	LFY 2021-2022	2022-23 to 2026-27	2027-28 to 2031-32	2032-33 to 2036-37	2037-38 to 2041-42
N/A					

Resiliency Projects with No Identified Funding Source Expenditures (in $thousands)

Project Name	LFY 2021-2022	2022-23 to 2026-27	2027-28 to 2031-32	2032-33 to 2036-37	2037-38 to 2041-42
N/A					

- Has a vulnerability assessment been completed for your jurisdiction's storm water system? No
  - If no, how many facilities have been assessed? N/A
- Does your jurisdiction have a long-range resiliency plan of 20 years or more? No
  - If yes, please provide a link if available:
  - If no, is a planning effort currently underway? No

Part 6.0 The estimated remaining useful life of each facility or its major components (Section 403.9302(3)(e), F.S.)

Rather than reporting the exact number of useful years remaining for individual components, this section is constructed to focus on infrastructure components that are targeted for replacement and will be major expenses within the 20-year time horizon. Major replacements include culverts and pipe networks, control structures, pump stations, physical/biological filter media, *etc* . Further, the costs of retrofitting when used in lieu of replacement (such as slip lining) should be included in this part. Finally, for the purposes of this document, it is assumed that open storage and conveyance systems are maintained (as opposed to replaced) and have an unlimited service life.

In order to distinguish between routine maintenance projects and the replacement projects to be included in this part, only major expenses are included here. A major expense is defined as any single replacement project greater than 5% of the jurisdiction's total O&M expenditures over the most recent five-year period (such as a project in late 2021 costing more than 5% of the O&M expenditures for fiscal years 2016-2017 to 2020-2021).

If you have more than 5 projects in a particular category, please use the "Additional Projects" tab. There, you can use dropdown lists to choose the project category and whether there is a committed funding source, then enter the project name and expenditure amounts.

End of Useful Life Replacement Projects with a Committed Funding Source

	Expenditures (in $thousands)				
Project Name	LFY 2021-2022	2022-23 to 2026-27	2027-28 to 2031-32	2032-33 to 2036-37	2037-38 to 2041-42
N/A					

End of Useful Life Replacement Projects with No Identified Funding Source

	Expenditures (in $thousands)				
Project Name	LFY 2021-2022	2022-23 to 2026-27	2027-28 to 2031-32	2032-33 to 2036-37	2037-38 to 2041-42
N/A					

Part 7.0 The most recent 5-year history of annual contributions to, expenditures from, and balances of any capital account for maintenance or expansion of any facility or its major components. (Section 403.9302(3)(f), F.S.)

This part of the template also addresses a portion of s. 403.9302(3)(g), F.S., by including historical expenditures. Many local governments refer to these as “actual” expenditures.

Consistent with expenditure projections, the jurisdiction’s actual expenditures are categorized into routine O&M, expansion, resiliency projects, and replacement of aging infrastructure. Additionally, the table includes space for reserve accounts. EDR’s interpretation of subparagraph 403.9302(3)(f), F.S., is that “capital account” refers to any reserve account developed specifically to cover future expenditures.

Note that for this table:

- Expenditures for local fiscal year 2020-21 can be estimated based on the most current information if final data is not yet available.
- Current Year Revenues include tax and fee collections budgeted for that fiscal year as well as unexpended balances from the prior year (balance forward or carry-over) unless they are earmarked for the rainy day or a dedicated reserve as explained in the following bullets.
- Bond proceeds should reflect only the amount expended in the given year.
- A reserve is a dedicated account to accumulate funds for a specific future expenditure.
- An all-purpose rainy day fund is a type of working capital fund typically used to address costs associated with emergencies or unplanned events.

The sum of the values reported in the "Funding Sources for Actual Expenditures" columns should equal the total "Actual Expenditures" amount. The cells in the "Funding Sources for Actual Expenditures" section will be highlighted red if their sum does not equal the "Actual Expenditures" total.

If you do not have a formal reserve dedicated to your stormwater system, please enter zero for the final two reserve columns.

Routine O&M

	Total	Funding Sources for Actual Expenditures					
	Actual Expenditures	Amount Drawn from Current Year Revenues	Amount Drawn from Bond Proceeds	Amount Drawn from Dedicated Reserve	Amount Drawn from All-Purpose Rainy Day Fund	Contributions to Reserve Account	Balance of Reserve Account
2016-17	13,790	13,790					
2017-18	17,580	17,580					
2018-19	21,285	21,285					
2019-20	23,405	23,405					
2020-21	23,955	23,955					

Expansion

	Total	Funding Sources for Actual Expenditures					
	Actual Expenditures	Amount Drawn from Current Year Revenues	Amount Drawn from Bond Proceeds	Amount Drawn from Dedicated Reserve	Amount Drawn from All-Purpose Rainy Day Fund	Contributions to Reserve Account	Balance of Reserve Account
2016-17	0						
2017-18	0						
2018-19	0						
2019-20	0						
2020-21	0						

Resiliency

	Total	Funding Sources for Actual Expenditures					
	Actual Expenditures	Amount Drawn from Current Year Revenues	Amount Drawn from Bond Proceeds	Amount Drawn from Dedicated Reserve	Amount Drawn from All-Purpose Rainy Day Fund	Contributions to Reserve Account	Balance of Reserve Account
2016-17	0						
2017-18	0						
2018-19	0						
2019-20	0						
2020-21	0						

Replacement of Aging Infrastructure

	Total	Funding Sources for Actual Expenditures					
	Actual Expenditures	Amount Drawn from Current Year Revenues	Amount Drawn from Bond Proceeds	Amount Drawn from Dedicated Reserve	Amount Drawn from All-Purpose Rainy Day Fund	Contributions to Reserve Account	Balance of Reserve Account
2016-17	0						
2017-18	0						
2018-19	0						
2019-20	0						
2020-21	0						

Part 8.0 The local government's plan to fund the maintenance or expansion of any facility or its major components. The plan must include historical and estimated future revenues and expenditures with an evaluation of how the local government expects to close any projected funding gap (Section 403.9302(3)(g), F.S.)

In this template, the historical data deemed necessary to comply with s. 403.9302(3)(g), F.S., was included in part 7.0. This part is forward looking and includes a funding gap calculation. The first two tables will be auto-filled from the data you reported in prior tables. To do this, EDR will rely on this template's working definition of projects with committed funding sources, *i.e.,* EDR assumes that all committed projects have committed revenues. Those projects with no identified funding source are considered to be unfunded. EDR has automated the calculation of projected funding gaps based on these assumptions.

Committed Funding Source	2022-23 to 2026-27	2027-28 to 2031-32	2032-33 to 2036-37	2037-38 to 2041-42
Maintenance	128	143	161	181
Expansion	0	0	0	0
Resiliency	0	0	0	0
Replacement/Aging Infrastructure	0	0	0	0
Total Committed Revenues (=Total Committed Projects)	128	143	161	181

No Identified Funding Source	2022-23 to 2026-27	2027-28 to 2031-32	2032-33 to 2036-37	2037-38 to 2041-42
Maintenance	0	0	0	0
Expansion	0	0	0	0
Resiliency	0	0	0	0
Replacement/Aging Infrastructure	0	0	0	0
Projected Funding Gap (=Total Non-Committed Needs)	0	0	0	0

For any specific strategies that will close or lessen a projected funding gap, please list them in the table below. For each strategy, also include the expected new revenue within the five-year increments.

Strategies for New Funding Sources	2022-23 to 2026-27	2027-28 to 2031-32	2032-33 to 2036-37	2037-38 to 2041-42
Total	0	0	0	0

Remaining Unfunded Needs	0	0	0	0

Additional Table Rows

Choose from the drop-down lists for Project Type and Funding Source Type, then fill in the project name and expenditure estimates.
Rows that are highlighted RED are either missing information in a "Project & Type Information" column or have zero expenditures.
Link to aggregated table to crosscheck category totals and uncategorized projects.

Project & Type Information			Expenditures (in $thousands)				
Project Type (Choose from dropdown list)	Funding Source Type (Choose from dropdown list)	Project Name	LFY 2021-2022	2022-23 to 2026-27	2027-28 to 2031-32	2032-33 to 2036-37	2037-38 to 2041-42

Project & Type Information			Expenditures (in $thousands)				
Project Type (Choose from dropdown list)	Funding Source Type (Choose from dropdown list)	Project Name	LFY 2021-2022	2022-23 to 2026-27	2027-28 to 2031-32	2032-33 to 2036-37	2037-38 to 2041-42

Project & Type Information			Expenditures (in $thousands)				
Project Type (Choose from dropdown list)	Funding Source Type (Choose from dropdown list)	Project Name	LFY 2021-2022	2022-23 to 2026-27	2027-28 to 2031-32	2032-33 to 2036-37	2037-38 to 2041-42

Project & Type Information			Expenditures (in $thousands)				
Project Type (Choose from dropdown list)	Funding Source Type (Choose from dropdown list)	Project Name	LFY 2021-2022	2022-23 to 2026-27	2027-28 to 2031-32	2032-33 to 2036-37	2037-38 to 2041-42

Project & Type Information			Expenditures (in $thousands)				
Project Type (Choose from dropdown list)	Funding Source Type (Choose from dropdown list)	Project Name	LFY 2021-2022	2022-23 to 2026-27	2027-28 to 2031-32	2032-33 to 2036-37	2037-38 to 2041-42

Project & Type Information			Expenditures (in $thousands)				
Project Type (Choose from dropdown list)	Funding Source Type (Choose from dropdown list)	Project Name	LFY 2021-2022	2022-23 to 2026-27	2027-28 to 2031-32	2032-33 to 2036-37	2037-38 to 2041-42

Project & Type Information			Expenditures				
Project Type	Funding Source Type		LFY 2021-2022	2022-23 to 2026-27	2027-28 to 2031-32	2032-33 to 2036-37	2037-38 to 2041-42
Expansion Projects, Flood Protection	Committed Funding Source	Aggregated Total	0	0	0	0	0
Expansion Projects, Water Quality	Committed Funding Source	Aggregated Total	0	0	0	0	0
Resiliency Projects	Committed Funding Source	Aggregated Total	0	0	0	0	0
End of Useful Life Replacement Projects	Committed Funding Source	Aggregated Total	0	0	0	0	0
Expansion Projects, Flood Protection	No Identified Funding Source	Aggregated Total	0	0	0	0	0
Expansion Projects, Water Quality	No Identified Funding Source	Aggregated Total	0	0	0	0	0
Resiliency Projects	No Identified Funding Source	Aggregated Total	0	0	0	0	0
End of Useful Life Replacement Projects	No Identified Funding Source	Aggregated Total	0	0	0	0	0

Total of Projects without Project Type and/or Funding Source Type	**0**	**0**	**0**	**0**	**0**

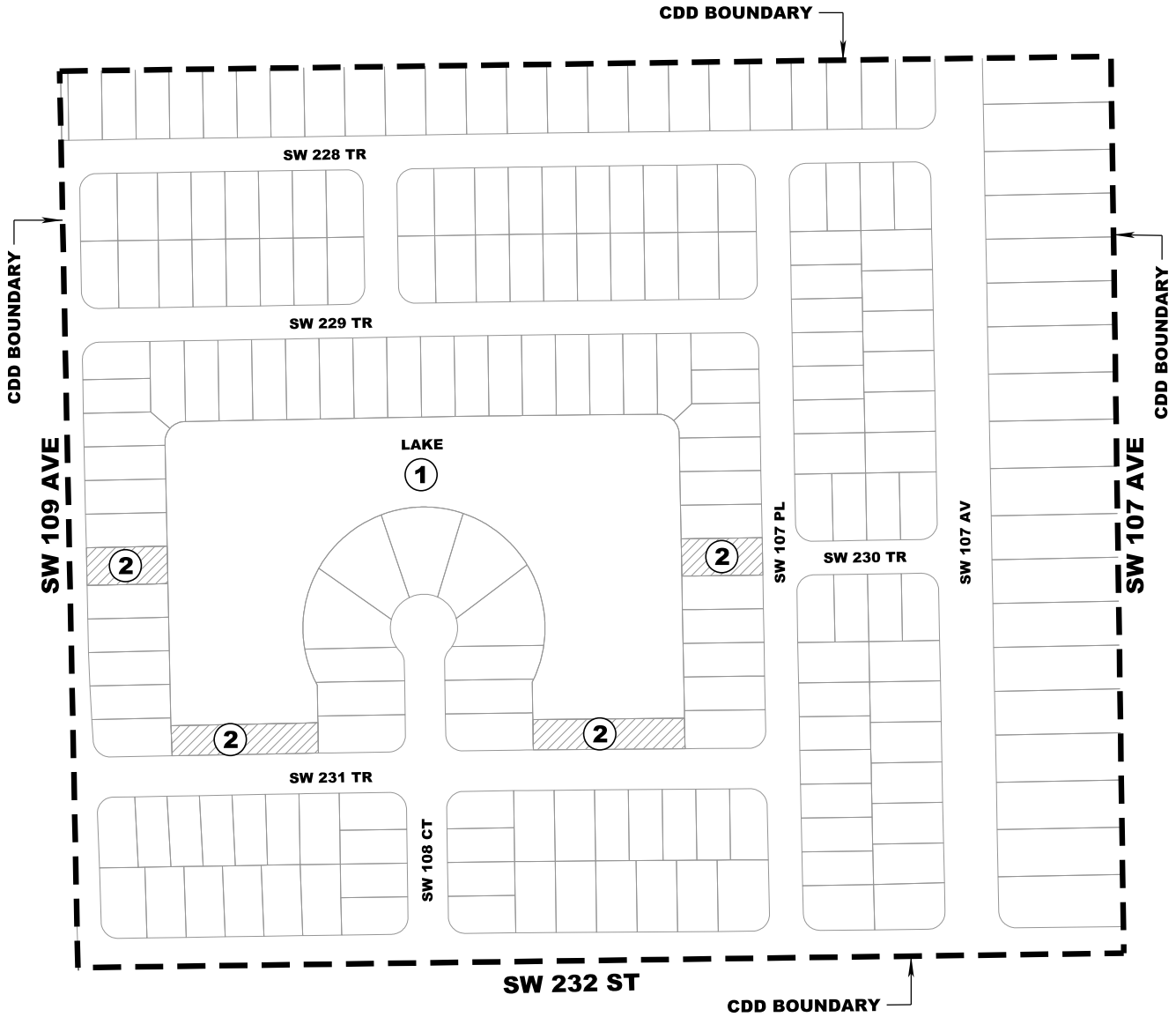

LEGEND:
ORB: OFFICIAL RECORD BOOK
PB: PLAT BOOK
PG: PAGE
SWD: SPECIAL WARRANTY DEED

CDD OWNERSHIP

1 TRACT "A" (PB 161, PG 71)
FOLIO 30-6018-026-2020
SWD: ORB 24901, PG 4407
CATEGORY: LAKE

2 TRACTS "B", "C", "D", AND "E" (PB 161, PG 71)
FOLIO: 30-6018-026-2030
SWD: ORB 24901, PG 4407
CATEGORY: COMMON AREAS

0 50' 150' 250'

ALVAREZ ENGINEERS, INC.

SILVER PALMS CDD
CDD LAND OWNERSHIP

EXHIBIT 1

5/11/2022 P:\070804 - Silver Palms CDD (Yearly Report)\2022 Report\001-CADD\EXHIBIT-02.dgn

MEMORANDUM

TO: District Manager

FROM: Billing, Cochran, Lyles, Mauro & Ramsey, P.A.
District Counsel

DATE: July 7, 2022

RE: 2022 Legislative Update

As District Counsel, throughout the year we continuously monitor pending legislation that may be applicable to the governance and operation of our Community Development District and other Special District clients. It is at this time of year that we summarize those legislative acts that have become law during the most recent legislative session, as follows:

1. Chapter 2022 – 220, Laws of Florida (HB 7055). The legislation prohibits state agencies and local governments from paying or otherwise complying with a ransomware incident and establishes penalties and fines for certain ransomware offenses against a government entity[1]. The law provides that a ransomware offense is punishable as a first degree felony. The legislation further provides that an employee or contractor of a government entity, with access to the government entity's network, who willfully and knowingly aids or abets another in the commission of a ransomware offense against the government entity commits a felony of the first degree. The law defines the severity level of a cybersecurity incident in accordance with the National Cyber Incident Response Plan. State agencies and local governments must report all ransomware incidents and high severity level cybersecurity incidents to the Cybersecurity Operations Center and the Cybercrime Office within the Florida Department of Law Enforcement as soon as possible, but no later than 12 hours after the discovery of the incident. Local Governments must also report the incident to the local sheriff's office. The legislation requires state agency and local government employees to undergo certain cybersecurity training within 30 days of employment and annually thereafter. The law requires local governments to adopt cybersecurity standards that safeguard the local government's data, information technology (IT), and IT resources. Counties with a population less than 75,000 and municipalities with a population less than 25,000 must adopt the standards by January 1, 2025. The legislation expands the purpose of the Cybersecurity Advisory Council (CAC) to include advising local governments on cybersecurity and requires the CAC to examine reported cybersecurity and ransomware incidents to develop best practice recommendations. The effective date of this act is July 1, 2022.

2. Chapter 2022 – 221, Laws of Florida (HB 7057). The legislation provides a general public record exemption in ch. 119, F.S., for the following information held by an agency:

---

[1] The bill defines the term "government entity" to mean any official, officer, commission, board, authority, council, committee, or department of the executive, judicial, or legislative branch of state government; state universities; and any county or municipality, special district, water management district, and any other district in this state.

- Coverage limits and deductible or self-insurance amounts of insurance or other risk mitigation coverages acquired for the protection of IT systems, operational technology systems, or data of an agency.
- Information relating to critical infrastructure.
- Network schematics, hardware and software configurations, or encryption information or information that identifies detection, investigation, or response practices for suspected or confirmed cybersecurity incidents.
- Cybersecurity incident information reported pursuant to Sections 282.318 or 282.3185, F.S.

The law also creates a public meeting exemption for any portion of a meeting that would reveal confidential and exempt information; however, any portion of an exempt meeting must be recorded and transcribed. The recording and transcript are confidential and exempt from public record requirements. The legislation provides for release of the confidential and exempt information in certain instances and authorizes agencies to report information about cybersecurity incidents in an aggregate format. The law provides for repeal of the exemptions on October 2, 2027, unless reviewed and saved from repeal by the Legislature, and provides a public necessity statement as required by the Florida Constitution. The effective date of this act is July 1, 2022.

3. Chapter 2022 – 140, Laws of Florida (HB 7001). In 2018, the electorate of Florida amended the state constitution to prohibit lobbying by certain public officers both during public service and for a six-year period after leaving public office. This legislation implements the new constitutional public officer lobbying prohibitions. The prohibitions address lobbying on issues of policy, appropriations, or procurement before the federal government, the legislature, any state government body or agency, or any political subdivision. It provides that the prohibitions apply to persons in public office on or after December 31, 2022. It authorizes the Commission on Ethics (Commission) to investigate and determine violations of the new prohibitions. The bill provides a range of penalties for violations and directs the Commission to report post-service lobbying violations and recommended punishment to the Governor for imposition of penalties. The prohibitions affect the following officers:

- Statewide elected officers;
- Members of the Legislature;
- County commissioners;
- Constitutional county officers and county charter officers;
- School board members;
- School superintendents;
- Elected municipal officers,
- Elected special district officers in special districts with ad valorem taxing authority; and
- Secretaries, executive directors, and other administrative heads of executive branch departments.

The effective date of this act is December 31, 2022.

4. Chapter 2022 – 97, Laws of Florida (HB 7071). The legislation provides for a number of tax reductions and other tax-related modifications designed to directly impact both families and businesses. Of interest to Special Districts is the provision that provides tax relief to parcel owners affected by a sudden and unforeseen collapse of a residential building. The law requires the tax collector to abate all taxes and non-ad valorem assessments for the year in which the destruction occurred, and the property appraiser must notify the owners of the abatement. The condition of the residential improvement on January 1 of the year the property was destroyed must have been in such a state that the residential improvement had no value due to a latent defect of the property not readily discernable by inspection. Parcel owners whose property tax is abated are not required to make a payment and property appraisers and tax collectors are prohibited from issuing tax notices. The legislation requires tax collectors to refund tax payments made for taxes levied in the year of collapse. The law requires value adjustment boards to dismiss petitions from parcel owners challenging the value of the parcel for the year of the collapse. The legislation also provides for the following sales tax holidays:

- Back to School July 25 to August 7
- Disaster Preparedness May 28 to June 10
- Energy Star Appliances September 1 to February 28
- Freedom Week[2] July 1 to July 7
- Tools used by Skilled Trade Workers September 3 to September 9
- Diapers July 1, 2022 to June 30, 2023
- Baby and Toddler Clothing July 1, 2022 to June 30, 2023
- Children's Books May 14 to August 14
- Impact resistant Windows and Doors July 1, 2022 to June 30, 2024

Section 197.3195, Florida Statutes, as created by this act, applies retroactively to January 1, 2021. The effective date of this legislation is July 1, 2022.

5. Chapter 2022 – 83, Laws of Florida (HB 1411). The legislation promotes the use of floating solar facilities by requiring local governments to allow these facilities as a permitted use under certain conditions and to amend its land development regulations to promote the use of floating solar. Floating solar is a concept that refers to any type of solar array that floats atop a body of water. The legislation defines "floating solar facility" as a solar facility, as defined in s. 163.3205(2), F.S., which is located on wastewater treatment ponds, abandoned limerock mine areas, stormwater treatment ponds, reclaimed water ponds, or other water storage reservoirs. Under the law, counties and municipalities may adopt ordinances specifying buffer and landscaping requirements for floating solar facilities, however, such requirements may not exceed the requirements for similar uses involving the construction of other solar facilities that are permitted uses in agricultural land use categories and zoning districts. The effective date of this legislation is July 1, 2022.

6. Chapter 2022 – 202, Laws of Florida (HB 967). The legislation requires the turfgrass science program at the University of Florida Institute of Food and Agricultural Sciences

[2] Specified admissions (live music events, live sporting events, movie theater tickets, gym access, entry to fairs and festivals, etc.) and items related to recreational activities.

(UF/IFAS), in coordination with the Department of Environmental Protection (DEP), to administer certification for golf course best management practices (BMPs) in order to provide a means of documenting and ensuring compliance with BMPs for fertilizer application to golf courses. The law requires UF/IFAS to provide training and testing certification programs and to issue certificates demonstrating completion of such programs. The certification expires four years after the date of issuance, and recertification is available if an applicant completes continuing education. Persons certified in golf course BMPs are exempt from additional local training and from local ordinances relating to water and fertilizer use, blackout periods, or restrictions unless a state of emergency is declared. The legislation encourages UF/IFAS to create a registry of persons certified on its website. The effective date of this legislation is July 1, 2022.

7. Chapter 2022 – 103, Laws of Florida (HB 7049). The legislation gives a governmental agency the option to publish its legal notices on the publicly accessible website of the county in which it lies instead of in a printed newspaper or on a newspaper's website if doing so would cost less than publishing legal notices in a newspaper. The law requires a special district spanning the geographic boundaries of more than one county and opting to publish legal notices on a publicly accessible website to publish its legal notices on the publicly accessible website of each county within its boundaries. A link to legal notices published on a publicly accessible website must be conspicuously placed on or accessible through a direct link from the (1) publicly accessible website's homepage; and (2) the homepage of the website of each governmental agency publishing legal notices online. A governmental agency publishing legal notices on a publicly accessible website must (1) give notice in a newspaper or in a mailed or delivered publication, at least annually, that property owners and residents may receive legal notices from the governmental agency by first-class mail or e-mail upon registering with the agency; and (2) maintain a registry of property owners and residents who request in writing to receive legal notices from the governmental agency by mail or e-mail. The effective date of this act is January 1, 2023.

8. Chapter 2022 – 216, Laws of Florida (HB 1057). The legislation provides that when an agency is determining whether a vendor is a responsible vendor, an agency may establish financial stability criteria and require a vendor to demonstrate its financial stability. If an agency requires a vendor to demonstrate its financial stability during the competitive solicitation process, the agency must accept any of the following documents as evidence of the vendor's financial stability:

- Audited financial statements that demonstrate the vendor's satisfaction of financial stability criteria.
- Documentation of an investment grade rating from a credit rating agency designated as a nationally recognized statistical rating organization by the Securities and Exchange Commission.
- For a vendor with annual revenues exceeding $1 billion, a letter containing a written declaration issued by the chief financial officer or controller attesting that the vendor is financially stable and meets the definition of financial stability.
- For a vendor with annual revenues of $1 billion or less, documentation, based on criteria established by the agency, evidencing that the vendor is financially stable and meets the definition of financial stability. The criteria established by the agency must be reasonably related to the value of the contract and may not include audited financial statements.

The law does not prohibit agencies from accepting additional documentation as evidence of financial stability and it does not preclude an agency from requiring a performance bond for the duration of the contract, when appropriate. The legislation defines the term "financial stability" to mean, at a minimum, having adequate income and capital and the capacity to efficiently allocate resources, assess and manage financial risks, and maintain financial soundness through the term of the contract. The legislation is effective upon becoming law.

9. Chapter 2022 – 190, Laws of Florida (SB 1062). The relevant portion of this legislation provides that service of process against any municipal corporation, agency, board, commission, department, subdivision of the state or any county that has a governing board, council, or commission or which is a body corporate must be served on the registered agent. However, if the entity does not have a registered agent, or if the registered agent cannot be served after one good faith attempt, the entity must be served:

- On the president, mayor, chair, or other head thereof, and in the absence of the aforementioned;
- On the vice president, vice mayor, or vice chair, and in the absence of the aforementioned;
- On any member of the governing board, council, or commission, the manager of the governmental entity, or an in-house attorney for the governmental entity, and in the absence of the aforementioned;
- On any employee of the governmental entity at the main office of the governmental entity.

The effective date of this legislation is January 2, 2023.

10. Chapter 2022 – 76, Laws of Florida (SB 882). The legislation requires each of the state's five regional water management districts (WMD), as part of its district water management plan and in cooperation with local governments, to develop a list of critical wetlands to be acquired using funds from the Land Acquisition Trust Fund. The WMD must consider the following criteria in designating a wetland for inclusion on the list:

- The ecological value of the wetland as determined by the physical and biological components of the environmental system;
- The effect of the wetland on water quality and flood mitigation;
- The ecosystem restoration value of the wetland; and
- The inherent susceptibility of the wetland to development due to its geographical location or natural aesthetics.

The law requires that before adopting or amending its list of critical wetlands, each WMD must notify property owners whose property the WMD is contemplating including on the list. A property owner who wishes to remove their property from the list must submit a letter to the WMD requesting such removal and sufficiently identifying the property. The WMD must approve the removal if those requirements are met. The effective date of this act is July 1, 2022.

11. Chapter 2022 – 121, Laws of Florida (SB 518). The legislation amends s. 163.045, F.S., to clarify that a local government may not burden a property owner's rights to prune, trim, or remove trees on his or her own residential property if the tree "poses an unacceptable risk" to

persons or property and the property owner possesses "documentation" from a landscape architect or certified arborist. A tree poses an "unacceptable risk" if removal is the only means of practically mitigating the risk below "moderate." The law also adds definitions for the terms "documentation" and "residential property." The definition for "documentation" requires that an onsite assessment be made in a certain manner by a specified type of certified arborist or architect. The bill defines "residential property" as a single-family detached building located on a lot that is actively used for single-family residential purposes. The effective date of this act is July 1, 2022.

12. Chapter 2022 – 89, Laws of Florida (HB 7053). To assist local governments in resilience planning, this legislation creates the Resilient Florida Grant Program (grant program), which authorizes the Department of Environmental Protection (DEP) to provide grants to a city or county to fund the costs of community resilience planning. In addition, the law directs DEP to develop an annual Statewide Flooding and Sea Level Rise Resilience Plan (plan), which consists of a list of ranked projects submitted by cities and counties that address risks posed by flooding and sea-level rise. With respect to the plan, the legislation requires DEP to rank and include in the plan all eligible projects that were submitted for the plan and to include a detailed narrative overview describing how the plan was developed. The bill authorizes special districts that are responsible for the management and maintenance of inlets and intracoastal waterways or for the operation and maintenance of a potable water facility, a wastewater facility, an airport, or a seaport facility to submit projects for inclusion in the plan. This act is effective July 1, 2022.

13. Chapter 2022 – 266, Laws of Florida (SB 4-C). This legislation dissolves all independent special districts established by a special act prior to the ratification of the Florida Constitution on November 5, 1968, if those districts have not been reestablished, re-ratified, or otherwise reconstituted by special act or general law after such date. Such special districts will be dissolved effective June 1, 2023. The following six districts appear to operate pursuant to a charter, which predates the 1968 Florida Constitution and was not reestablished, re-ratified, or otherwise reconstituted by a special act or general law after November 5, 1968:

- Bradford County Development Authority (Bradford County)
- Sunshine Water Control District (Broward County)
- Eastpoint Water and Sewer District (Franklin County)
- Hamilton County Development Authority (Hamilton County)
- Reedy Creek Improvement District (Orange and Osceola Counties)
- Marion County Law Library (Marion County)

The law allows an independent special district affected by the bill to be re-established on or after June 1, 2023, pursuant to the requirements and limitations of ch. 189 F.S. When there is a dissolution of a special district government, the special district transfers the title to all property owned by the preexisting special district to the local general-purpose government, either a county or municipality, which shall also assume all indebtedness of the preexisting special district. This act is effective July 1, 2022.

For convenience, we have included copies of the legislation referenced in this memorandum. We request that you include this memorandum as part of the agenda packages for upcoming meetings of the governing boards of those special districts in which you serve as the

District Manager and this firm serves as District Counsel. For purposes of the agenda package, it is not necessary to include the attached legislation, as we can provide copies to anyone requesting the same. Copies of the referenced legislation are also accessible by visiting this link: http://laws.flrules.org/.